HLF Steel Casework

Steel casework is the backbone of your lab. Nobody does it better than Hanson.

Steel Casework Index

Base Cabinet Details 2.2

Sitting Height Cabinets **2.3**
- Base Cabinets
- Corner Base Cabinets
- Sink Cabinets
- Specialty Cabinets

ADA Height Cabinets **2.11**
- Corner Base Cabinets
- Sink Cabinets
- Specialty Cabinets

Standing Height Base Cabinets **2.17**
- Base Cabinets
- Corner Cabinets
- Sink Cabinets
- Specialty Cabinets

Accessories **2.25**
- Cabinet Accessories
- Base Cabinet Fillers and Scribes
- Knee Space Panels
- Drawer Frames, Apron Rails & Leg Assemblies
- Fixed Height Tables
- Rear Enclosure Panels

Wall Cabinets **2.31**
- Wall Cabinet Details
- 24” Wall Cabinets
- Double Sided Upper Cabinets
- 30” Wall Cabinets
- 36” Wall Cabinets
- 48” Wall Cabinets
- Wall Cabinet Filler Panels

Tall Cabinets **2.41**
- Tall Cabinet Details
- Tall Storage Cabinets
- Tall Cabinet Fillers and Scribes

Base Cabinet Details

HLF Base Cabinets

Hanson cabinets are supplied in a variety of styles and sizes including custom designed cabinets and options to meet your specific applications.

- Low sitting height base cabinets.
- ADA height base cabinets.
- Standing height base cabinets.
- Suspended cabinets.
- Mobile cabinets.
- Specialty cabinets.
- Cabinet options and accessories.

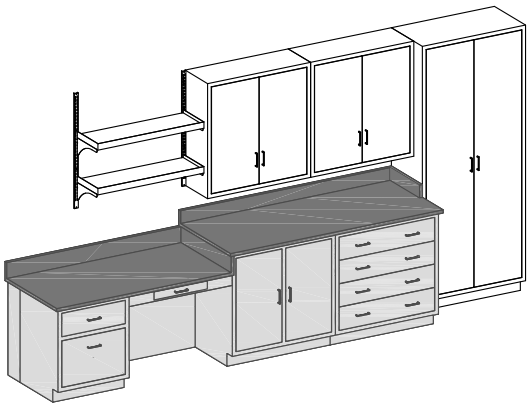

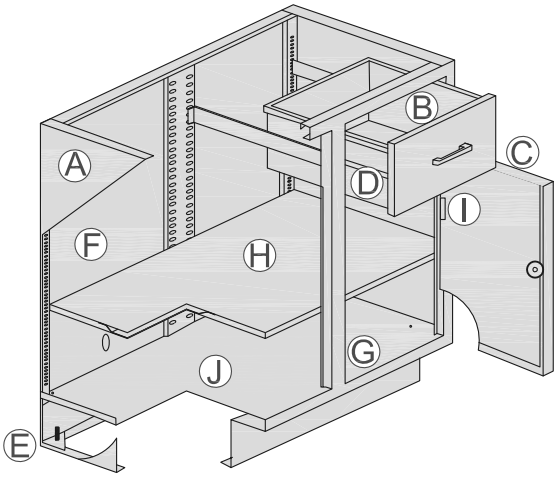

HLF Features and Benefits

A - Cabinet body design accepts multiple arrangements of doors and drawers to permit field changes at any time.
B - One piece drawer bodies with coved horizontal corners for easy cleaning.
C - 18 ga. double walled drawer and door fronts, with sound deadening full channeled edges.
D - Full extension, ball bearing, 100 lb. capacity drawer slides.
E - 14 ga. welded gusset plates with hex head leveling bolts at all corners.
F - 18 ga. fully removable back panels at door and open cabinets for access to service piping behind cabinets.
G - 18 ga. cabinet bodies with flush seamless welded face. Channel - shaped intermediate uprights prevent cabinet racking and precise fit of doors and drawers.
H - 20 ga. adjustable shelves are included in open and cupboard cabinets.
I - Stainless steel 5 knuckle hinges.
J - HLF cabinets have electrostatically applied baked on powder coated epoxy paint finish for superior performance.

The Science of Laboratory Construction

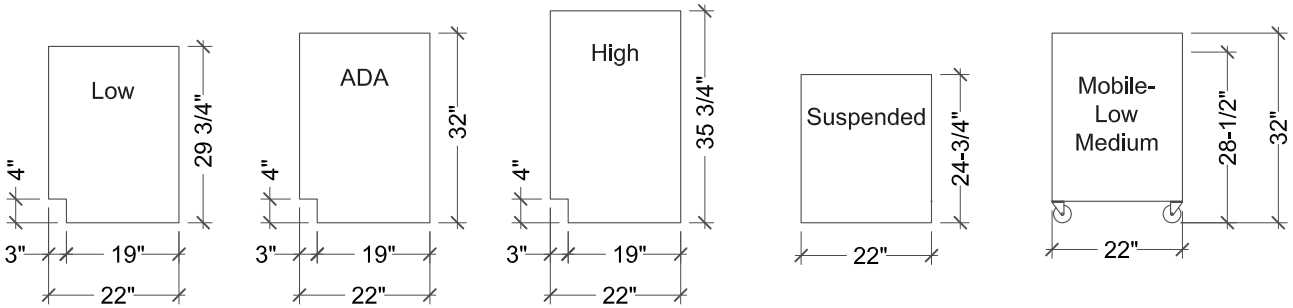

Base Cabinets

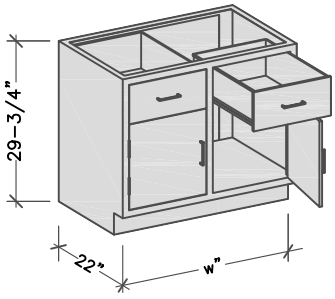

The HLF Advantages:

- Inset steel - flush face construction.
- Sitting height cabinets are 29-3/4" h. and 22"d. Widths as shown below.
- Open cabinets have 2 adjustable shelves.
- Cupboard cabinets have one adjustable shelf.
- Open and cabinets with doors have removable back panels.
- For locks, specify -LK at the end of the product number.

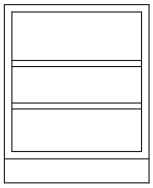

Model	Width
AJ15 L	15"
AJ18L	18-1/8"
AJ24L	24-1/8"

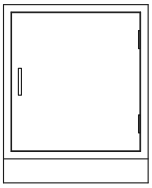

Model	Width
AA15L	15"
AA18L	18-1/8"
AA24L	24-1/8"

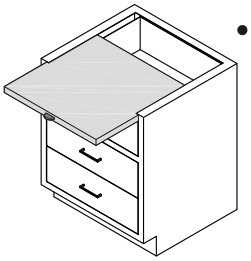

Optional Pull Boards

- Pull boards are available on any 15", 18", and 24" wide cabinets. In order for pull boards to be added to 30", 35", 42", or 47" wide base cabinets, they must have a center vertical rail. Specify pull boards for left, right, or both sides for 30" thru 47" wide base cabinets. To add pull boards specify -PB at the end of the model number.

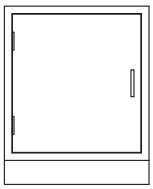

Model	Width
AA15LL	15"
AA18LL	18-1/8"
AA24LL	24-1/8"

L = Left Hinged Door

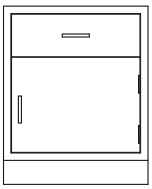

Model	Width
AB15L	15"
AB18L	18-1/8"
AB24L	24-1/8"

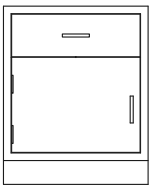

Model	Width
AB15LL	15"
AB18LL	18-1/8"
AB24LL	24-1/8"

L = Left Hinged Door

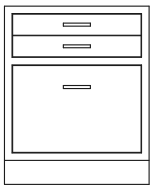

Model	Width
AG18L	18-1/8"
AG24L	24-1/8"

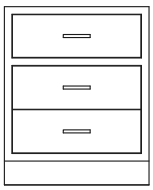

Model	Width
AD15L	15"
AD18L	18-1/8"
AD24L	24-1/8"

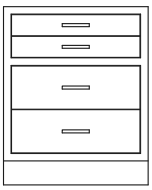

Model	Width
AF18L	18-1/8"
AF24L	24-1/8"

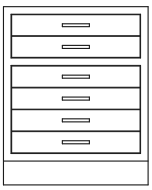

Model	Width
AH18L	18-1/8"
AH24L	24-1/8"

Base Cabinets

SITTING HEIGHT - 29 3/4”

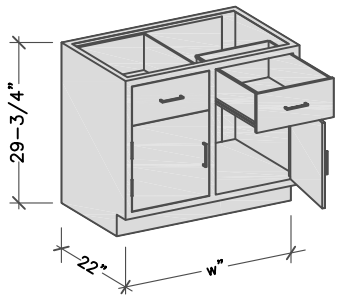

The HLF Advantages:

- Inset steel - flush face construction.
- Sitting height cabinets are 29-3/4" h. and 22" d. Widths as shown below.
- Open cabinets have 2 adjustable shelves.
- Cupboard cabinets have one adjustable shelf.
- Open and cabinets with doors have removable back panels.
- For locks, specify -LK at the end of the product number.

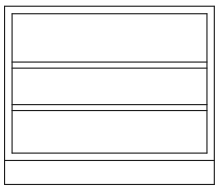

Model	Width
DY30L	30"
DY35L	35"
DY42L	42"
DY47L	47"

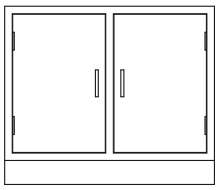

Model	Width
DA30L	30"
DA35L	35"
DA42L	42"
DA47L	47"

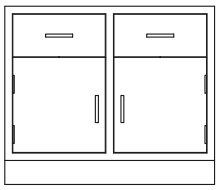

Model	Width
DD30L	30"
DD35L	35"
DD42L	42"
DD47L	47"

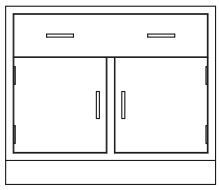

Model	Width
DC30L	30"
DC35L	35"
DC42L	42"
DC47L	47"

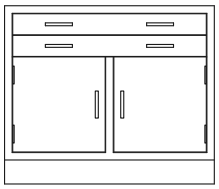

Model	Width
DE30L	30"
DE35L	35"
DE42L	42"
DE47L	47"

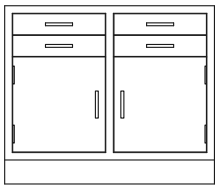

Model	Width
DF30L	30"
DF35L	35"
DF42L	42"
DF47L	47"

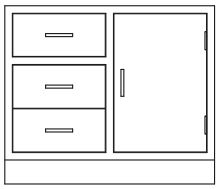

Model	Width
DG30L	30"
DG35L	35"
DG42L	42"
DG47L	47"

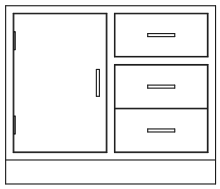

Model	Width
DG30LLC	30"
DG35LLC	35"
DG42LLC	42"
DG47LLC	47"

LC = Left Cupboard Door

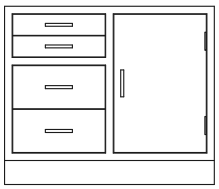

Model	Width
DH30L	30"
DH35L	35"
DH42L	42"
DH47L	47"

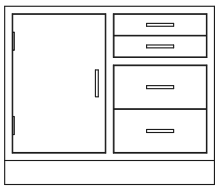

Model	Width
DH30LLC	30"
DH35LLC	35"
DH42LLC	42"
DH47LLC	47"

LC = Left Cupboard Door

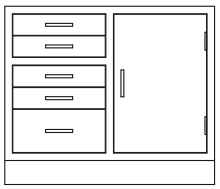

Model	Width
DI30L	30"
DI35L	35"
DI42L	42"
DI47L	47"

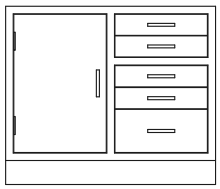

Model	Width
DI30LLC	30"
DI35LLC	35"
DI42LLC	42"
DI47LLC	47"

LC = Left Cupboard Door

Base Cabinets

SITTING HEIGHT - 29 3/4”

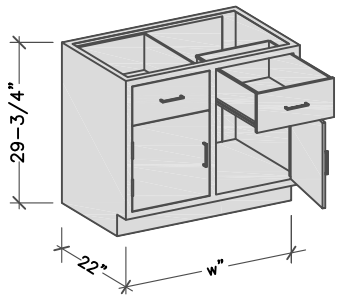

The HLF Advantages:

- Inset steel - flush face construction.
- Sitting height cabinets are 29-3/4" h. and 22" d. Widths as shown below.
- Open cabinets have 2 adjustable shelves.
- Cupboard cabinets have one adjustable shelf.
- Open and cabinets with doors have removable back panels.
- For locks, specify -LK at the end of the product number.

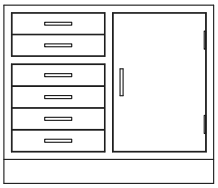

Model	Width
DJ30L	30"
DJ35L	35"
DJ42L	42"
DJ47L	47"

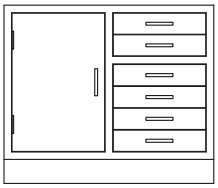

Model	Width
DJ30LLC	30"
DJ35LLC	35"
DJ42LLC	42"
DJ47LLC	47"

LC = Left Cupboard Door

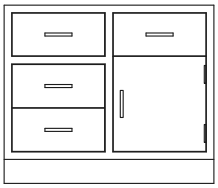

Model	Width
DK30L	30"
DK35L	35"
DK42L	42"
DK47L	47"

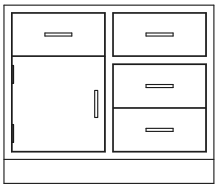

Model	Width
DK30LLC	30"
DK35LLC	35"
DK42LLC	42"
DK47LLC	47"

LC = Left Cupboard Door

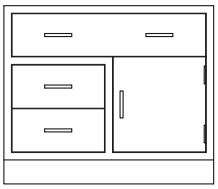

Model	Width
DO30L	30"
DO35L	35"
DO42L	42"
DO47L	47"

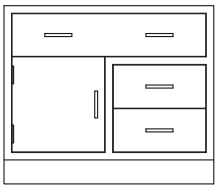

Model	Width
DO30LLC	30"
DO35LLC	35"
DO42LLC	42"
DO47LLC	47"

LC = Left Cupboard Door

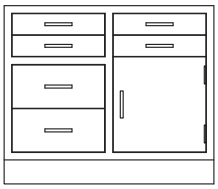

Model	Width
DZ30L	30"
DZ35L	35"
DZ42L	42"
DZ47L	47"

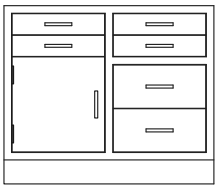

Model	Width
DZ30LLC	30"
DZ35LLC	35"
DZ42LLC	42"
DZ47LLC	47"

LC = Left Cupboard Door

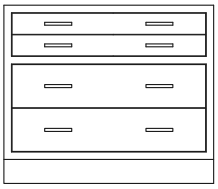

Model	Width
DN30L	30"
DN35L	35"
DN42L	42"
DN47L	47"

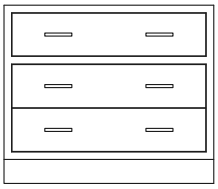

Model	Width
DP30L	30"
DP35L	35"
DP42L	42"
DP47L	47"

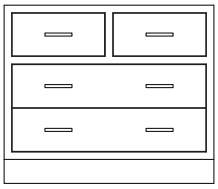

Model	Width
DQ30L	30"
DQ35L	35"
DQ42L	42"
DQ47L	47"

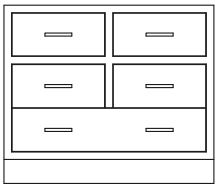

Model	Width
DR30L	30"
DR35L	35"
DR42L	42"
DR47L	47"

Base Cabinets

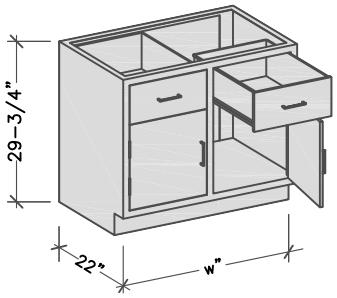

The HLF Advantages:

- Inset steel - flush face construction.
- Sitting height cabinets are 29-3/4" h. and 22" d. Widths as shown below.
- Open cabinets have 2 adjustable shelves.
- Cupboard cabinets have one adjustable shelf.
- Open and cabinets with doors have removable back panels.
- For locks, specify -LK at the end of the product number.

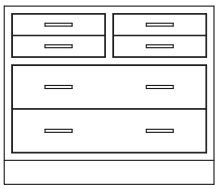

Model	Width
DS30L	30"
DS35L	35"
DS42L	42"
DS47L	47"

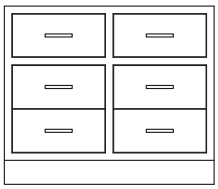

Model	Width
DT30L	30"
DT35L	35"
DT42L	42"
DT47L	47"

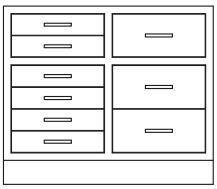

Model	Width
DV30L	30"
DV35L	35"
DV42L	42"
DV47L	47"

Corner Base Cabinets

SITTING HEIGHT - 29 3/4”

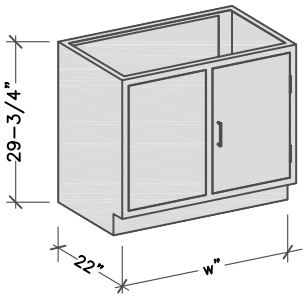

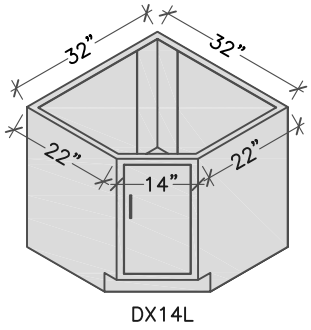

DX14L

The HLF Advantages:

- Inset steel - flush face construction.
- Sitting height cabinets are 29-3/4" h. Widths as shown below.
- DX diagonal corner cabinets do not have shelves.
- For locks, specify -LK at the end of the product number.

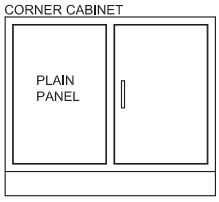

Model	Width
DW30L	30"
DW35L	35"
DW42L	42"
DW47L	47"

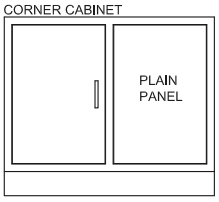

Model	Width
DW30LLC	30"
DW35LLC	35"
DW42LLC	42"
DW47LLC	47"

LC = Left Cupboard Door

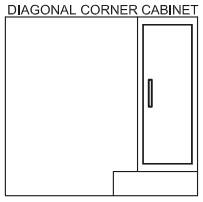

Model	Width
DX14L	32"

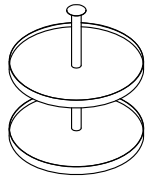

Model	
LS-1	1-Tier "Lazy Susan"
LS-2	2-Tier "Lazy Susan"

Fits into DX style corner cabinet.

Sink Cabinets

SITTING HEIGHT - 29 3/4”

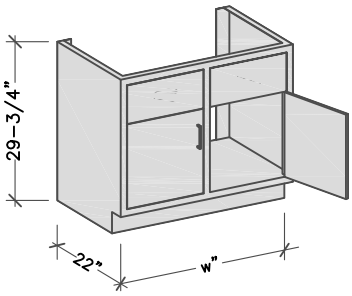

The HLF Advantages:

- Inset steel - flush face construction.
- Sitting height cabinets are 29-3/4" h. Widths as shown below.
- Sink cabinets have a lower rear panel.
- For locks specify -LK at the end of the product number.
- If a cutout is required at the front toe kick for a foot-controlled fixture application, specify -FCC after the sink cabinet model number.

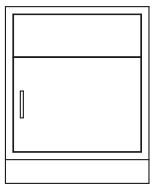

Model	Width
AC18L	18-1/8"
AC24L	24-1/8"

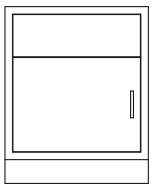

Model	Width
AC18LL	18-1/8"
AC24LL	24-1/8"

L = Left Hinged Door

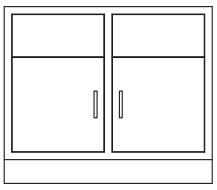

Model	Width
DB30L	30"
DB35L	35"
DB42L	42"
DB47L	47"
DB52L	52"
DB58L	58"

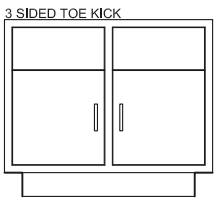

Model	Width
DB47L3S	47"
DB52L3S	52"
DB58L3S	58"

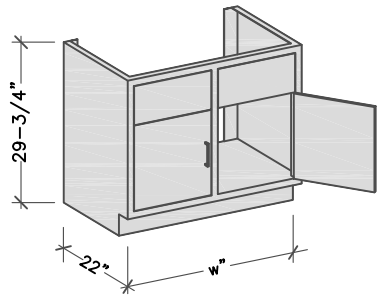

Fume Hood Base Cabinets

- Inset steel - flush face construction.
- Designed for under fume hood applications or used when sinks are required inside fume hood.
- Provided without shelves.
- For locks, specify -LK at the end of the product number.

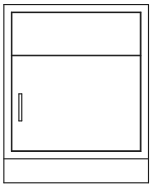

Model	Width
FHB18L	18-1/8"
FHB23L	23"
FHB24L	24-1/8"

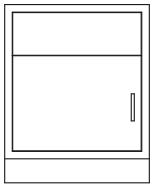

Model	Width
FHB18LL	18-1/8"
FHB23LL	23"
FHB24LL	24-1/8"

L = Left Hinged Door

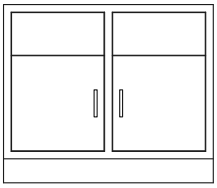

Model	Width
FHB30L	30"
FHB35L	35"
FHB47L	47"
FHB58L	58"

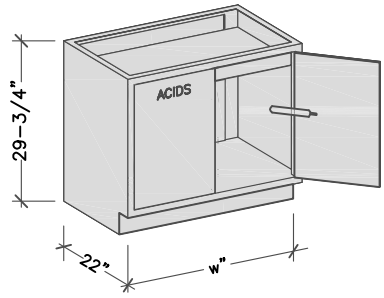

Acid / Corrosive Storage Cabinets

- Designed for under counter and under fume hood applications, for storage of corrosive materials.
- Pneumatic self-closing door. Doors have a 165° fusible link that automatically closes the doors in case of a fire.
- 3 point locking door mechanism with keyed lock.
- Includes one adjustable shelf.
- Two vent holes are provided in the back of cabinet for use with an optional VKACID vent kit.
- Lined with corrosive resistant liner board.

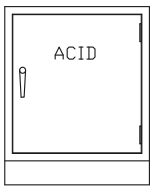

Model	Width
ASB18L	18"
ASB23L	23"
ASB24L	24"

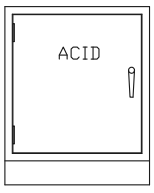

Model	Width
ASB18LL	18"
ASB23LL	23"
ASB24LL	24"

L = Left Hinged Door

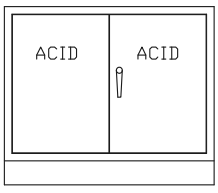

Model	Width
ASB30L	30"
ASB35L	35"
ASB47L	47"

Model	Capacity
ASB18L	8 Gal.
ASB23L	10 Gal.
ASB24L	10 Gal.
ASB30L	12 Gal.
ASB35L	16 Gal.
ASB47L	25 Gal.

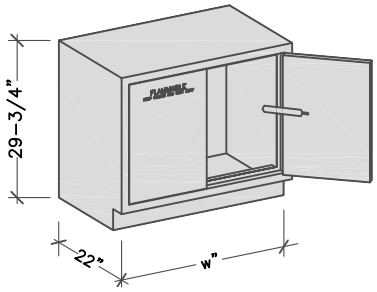

Flammable Storage Cabinets

- Meets NFPA, FM, UL standards.
- Use under counters, under fume hoods or in stand-alone applications.
- Double-wall 18 ga. construction w / 1.5" air space.
- Pneumatic self-closing door. Doors have a 165° fusible link that automatically closes the door in case of a fire.
- 3 point locking door mechanism with keyed lock.
- Chemical-resistant interior and exterior finish.
- Includes one adjustable shelf.
- 18 ga., 2" sill at bottom to retain spills.
- Two spark arrester vent holes are provided in back of cabinet for use with an optional VKFLAM vent kits.
- A removable panel is provided in the back of the cabinet for access to plumbing.

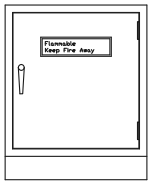

Model	Width
FSB18L	18"
FSB23L	23"
FSB24L	24"

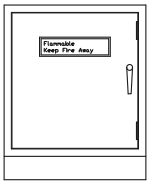

Model	Width
FSB18LL	18"
FSB23LL	23"
FSB24LL	24"

L = Left Hinged Door

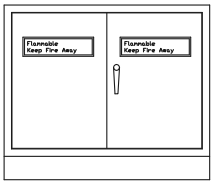

Model	Width
FSB30L	30"
FSB35L	35"
FSB47L	47"

Model	Capacity
FSB18L	8 Gal.
FSB23L	10 Gal.
FSB24L	10 Gal.
FSB30L	12 Gal.
FSB35L	16 Gal.
FSB47L	25 Gal.

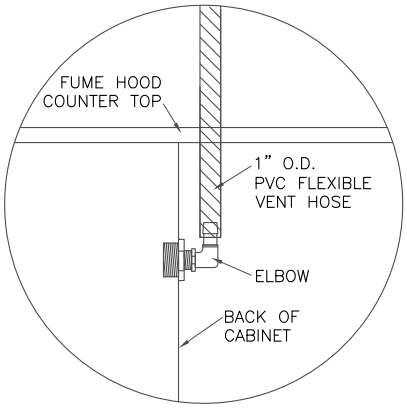

Acid and Vacuum Cabinet Vent Kit

- For connection from acid cabinet to fume hood ducting.
- Includes an 8' long, 1" diameter O.D. PVC flexible hose.
- Connection to ducting by others. Connection hardware to ducting to be provided by others.
- A threaded elbow connection is provided for attachment to back of cabinet.

Model	Hose Length
VKACID	8'
VKVAC	8'

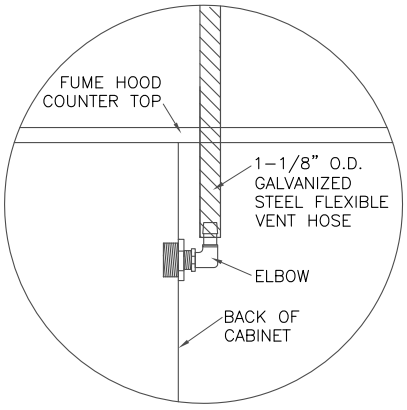

Flammable Cabinet Vent Kit

- For connection from flammable cabinet to fume hood ducting.
- Includes an 8' long,1-1/8" diameter O.D. galvanized steel flexible hose.
- Connection to ducting by others. Connection hardware to ducting to be provided by others.
- A threaded elbow connection is provided for attachment to back of cabinet.

Model	Hose Length
VKFLAM	8'

Vacuum Pump Cabinets - With Floor

- With a floor and pull out bottom shelf.
- Designed with pre-wired electrical package, pilot light switch, interior duplex receptacle and exhaust fan.
- One 8ft. electrical conduit whip is provided with each cabinet.
- 35", 42", and 47" wide cabinets have 2 electrical packages.
- Sound deadening interior insulation.
- A vent hole is provided in the back of cabinet for use with VKVAC vent kit.

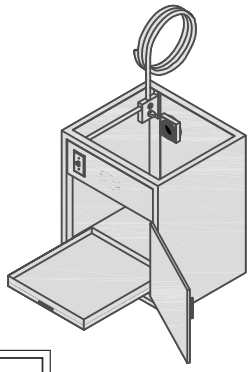

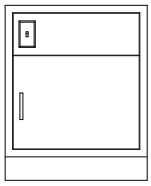

Model	Width
VAC23LF	23"
VAC24LF	24-1/8"

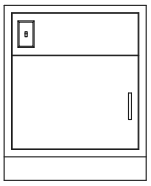

Model	Width
VAC23LLF	23"
VAC24LLF	24-1/8"

L = Left Hinged Door
F = Floor & Pull Out Shelf

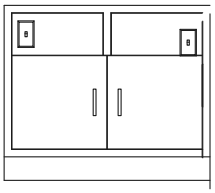

Model	Width
VAC30LF	30"
VAC35LF	35"
VAC42LF	42"
VAC47LF	47

F = Floor & Pull Out Shelf

Vacuum Pump Cabinets - Without Floor

- Without a floor for optional mobile platform
- Designed with pre-wired electrical package, pilot light switch, interior duplex receptacle and exhaust fan.
- One 8ft. electrical conduit whip is provided with each cabinet.
- 35", 42", and 47" wide cabinets have 2 electrical packages.
- Sound deadening interior insulation.
- A vent hole is provided in the back of cabinet for with VKVAC vent kit.

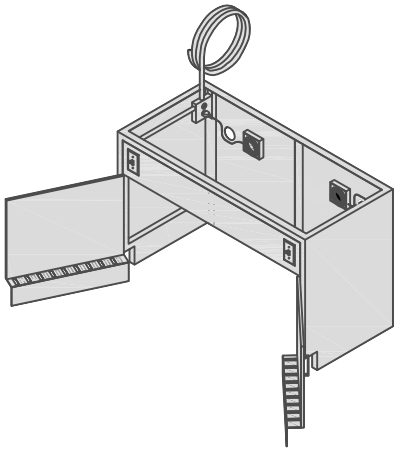

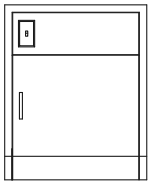

Model	Width
VAC23L	23"
VAC24L	24-1/8"

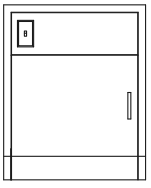

Model	Width
VAC23LL	23"
VAC24LL	24-1/8"

L = Left Hinged Door

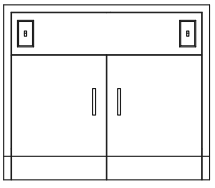

Model	Width
VAC30L	30"
VAC35L	35"
VAC42L	42"
VAC47L	47

Mobile Platform

- Mobile platform for use with vacuum pump cabinets.
- Lipped platform has 4 casters.
- 16" deep X 5-1/2" high. Includes a 2" high lip on 4 sides.

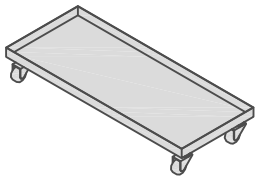

Model	Width
MP-24	19" w Fits 24" Cabinet
MP-30	25" w Fits 30" Cabinet
MP-35	30" w Fits 35" Cabinet
MP-42	37" w Fits 42" Cabinet
MP-47	42" w Fits 47" Cabinet

Base Cabinets

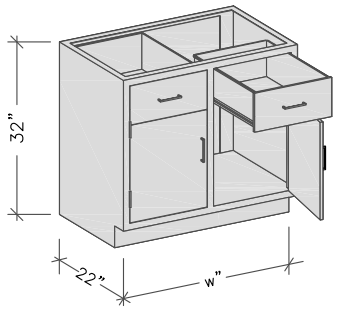

The HLF Advantages:

- Inset steel - flush face construction.
- ADA height cabinets are 32" h. and 22"d. Widths as shown below.
- Open cabinets have 2 adjustable shelves.
- Cupboard cabinets have one adjustable shelf.
- Open and cabinets with doors have removable back panels.
- For locks, specify -LK at the end of the product number.

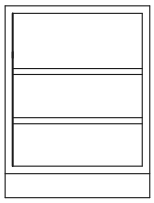

Model	Width
AJ15ADA	15"
AJ18ADA	18-1/8"
AJ24ADA	24-1/8"

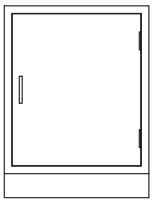

Model	Width
AA15ADA	15"
AA18ADA	18-1/8"
AA24ADA	24-1/8"

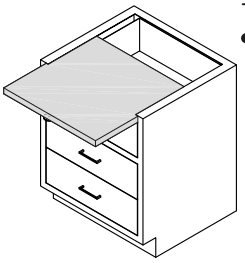

Optional Pull Boards

- Pull boards are available on any 15", 18", and 24" wide cabinets. In order for pull boards to be added to 30", 35", 42", or 47" wide base cabinets, they must have a center vertical rail. Specify pull boards for left, right, or both sides for 30" thru 47" wide base cabinets. To add pull boards specify -PB at the end of the model number.

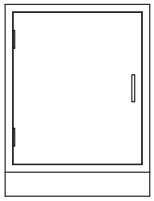

Model	Width
AA15ADAL	15"
AA18ADAL	18-1/8"
AA24ADAL	24-1/8"

L= Left hinged door

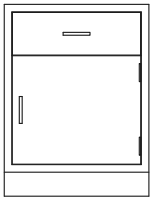

Model	Width
AB15ADA	15"
AB18ADA	18-1/8"
AB24ADA	24-1/8"

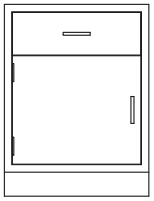

Model	Width
AB15ADAL	15"
AB18ADAL	18-1/8"
AB24ADAL	24-1/8"

L= Left Hinged Door

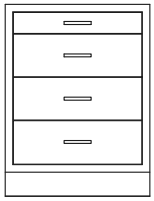

Model	Width
AF15ADA	15"
AF18ADA	18-1/8"
AF24ADA	24-1/8"

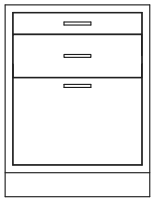

Model	Width
AG18ADA	18-1/8"
AG24ADA	24-1/8"

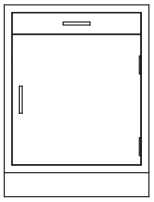

Model	Width
AL18ADA	18-1/8"
AL24ADA	24-1/8"

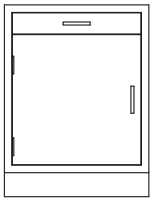

Model	Width
AL18ADAL	18-1/8"
AL24ADAL	24-1/8"

L= Left Hinged Door

Base Cabinets

ADA HEIGHT- 32”

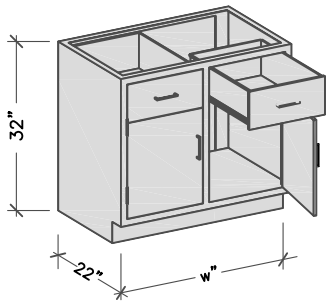

The HLF Advantages:

- Inset steel - flush face construction.
- ADA height cabinets are 32" h. and 22"d. Widths as shown below.
- Open cabinets have 2 adjustable shelves.
- Cupboard cabinets have one adjustable shelf.
- Open and cabinets with doors have removable back panels.
- For locks, specify -LK at the end of the product number.

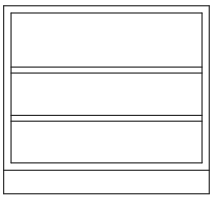

Model	Width
DY30ADA	30"
DY35ADA	35"
DY42ADA	42"
DY47ADA	47"

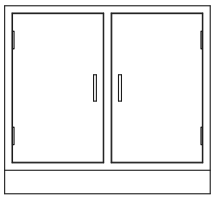

Model	Width
DA30ADA	30"
DA35ADA	35"
DA42ADA	42"
DA47ADA	47"

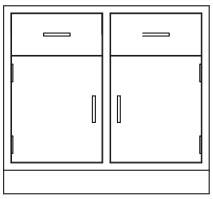

Model	Width
DD30ADA	30"
DD35ADA	35"
DD42ADA	42"
DD47ADA	47"

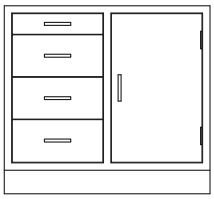

Model	Width
DG30ADA	30"
DG35ADA	35"
DG42ADA	42"
DG47ADA	47"

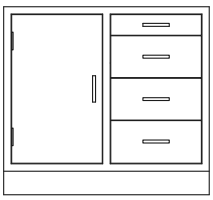

Model	Width
DG30ADALC	30"
DG35ADALC	35"
DG42ADALC	42"
DG47ADALC	47"

LC = Left Cupboard Door

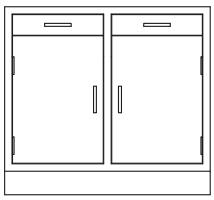

Model	Width
DL30ADA	30"
DL35ADA	35"
DL42ADA	42"
DL47ADA	47"

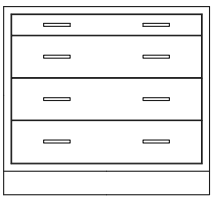

Model	Width
DP30ADA	30"
DP35ADA	35"
DP42ADA	42"
DP47ADA	47"

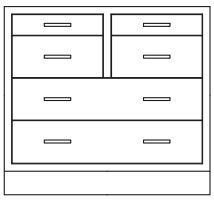

Model	Width
DR30ADA	30"
DR35ADA	35"
DR42ADA	42"
DR47ADA	47"

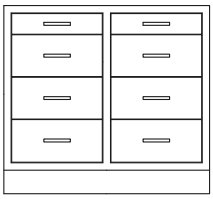

Model	Width
DT30ADA	30"
DT35ADA	35"
DT42ADA	42"
DT47ADA	47"

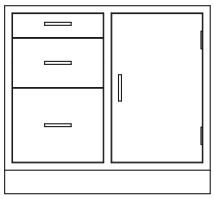

Model	Width
DU30ADA	30"
DU35ADA	35"
DU42ADA	42"
DU47ADA	47"

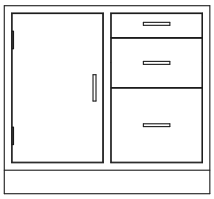

Model	Width
DU30ADALC	30"
DU35ADALC	35"
DU42ADALC	42"
DU47ADALC	47"

LC = Left Cupboard Door

Corner Base Cabinets

ADA HEIGHT- 32”

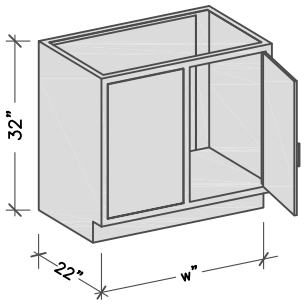

The HLF Advantages:

- Inset steel - flush face construction.
- ADA height cabinets are 32" h. Widths as shown below.
- Open and cupboard cabinets have one adjustable shelf.
- For locks, specify -LK at the end of the product number.

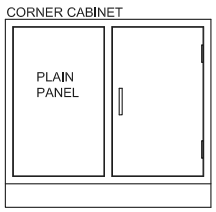

Model	Width
DW30ADA	30"
DW35ADA	35"
DW42ADA	42"
DW47ADA	47"

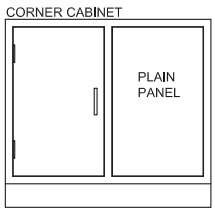

Model	Width
DW30ADALC	30"
DW35ADALC	35"
DW42ADALC	42"
DW47ADALC	47"

LC = Left Cupboard Door

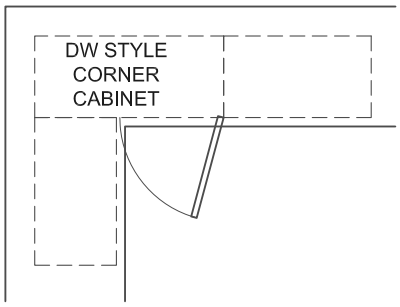

Sink Cabinets

ADA HEIGHT- 32”

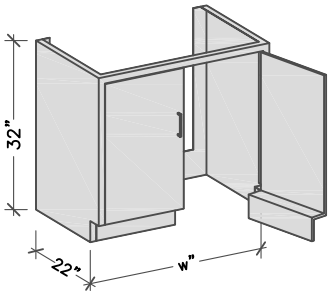

The HLF Advantages:

- Inset steel - flush face construction.
- ADA height cabinets are 32" h. Widths as shown below.
- Sink cabinets without a bottom floor have an integral toe kick for wheel chair accessibility.
- Sink cabinet style with floor are not wheel chair accessible.
- Sink cabinets have a lower rear panel, no shelves.
- For locks specify -LK at the end of the product number.

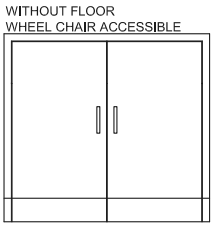

Model	Width
DB35ADA	35"
DB42ADA	42"
DB47ADA	47"
DB52ADA	52"
DB58ADA	58"

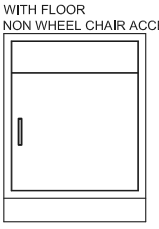

Model	Width
AC18ADAF	18-1/8"
AC24ADAF	24-1/8"

F = Floor

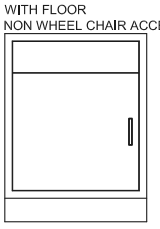

Model	Width
AC18ADALF	18-1/8"
AC24ADALF	24-1/8"

L = Left Hinged Door
F = Floor

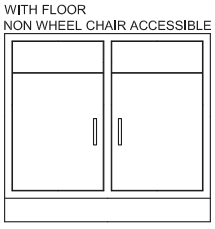

Model	Width
DB30ADAF	30"
DB35ADAF	35"
DB42ADAF	42"
DB47ADAF	47"
DB52ADAF	52"
DB58ADAF	58"

F = Floor

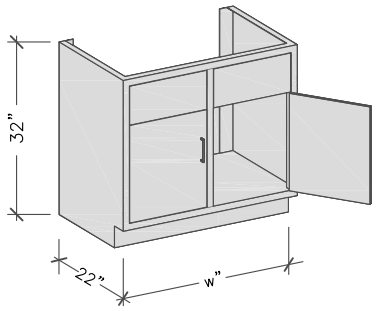

Fume Hood Base Cabinets

- Inset steel - flush face construction.
- Designed for under fume hood applications or used when sinks are required inside fume hood.
- Use ADA height sink cabinets if wheelchair access is required.
- For locks, specify -LK at the end of the product number.

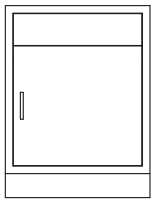

Model	Width
FHB11ADA	11"
FHB18ADA	18-1/8"
FHB23ADA	23"
FHB24ADA	24-1/8"

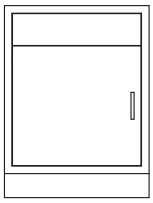

Model	Width
FHB11ADAL	11"
FHB18ADAL	18-1/8"
FHB23ADAL	23"
FHB24ADAL	24-1/8"

L= Left Hinged Door

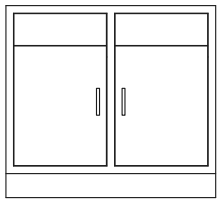

Model	Width
FHB30ADA	30"
FHB35ADA	35"
FHB47ADA	47"
FHB58ADA	58"

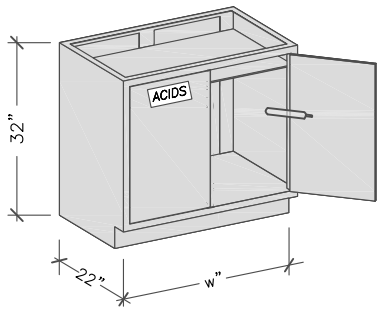

Acid / Corrosive Storage Cabinets

- Designed for under counter and under fume hood applications, for storage of corrosive materials.
- Pneumatic self-closing door. Doors have a 165° fusible link that automatically closes the doors in case of a fire.
- 3 point locking door mechanism with keyed lock.
- Includes one adjustable shelf.
- Two vent holes are provided in the back of cabinet for use with an optional VKACID vent kit.
- Lined with corrosive resistant liner board.

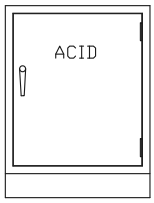

Model	Width
ASB18ADA	18"
ASB23ADA	23"
ASB24ADA	24"

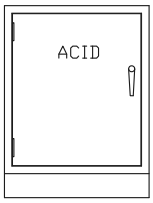

Model	Width
ASB18ADAL	18"
ASB23ADAL	23"
ASB24ADAL	24"

L = Left Hinged Door

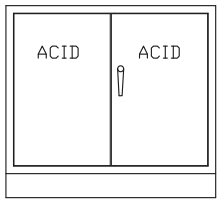

Model	Width
ASB30ADA	30"
ASB35ADA	35"
ASB47ADA	47"

Model	Capacity
ASB18ADA	8 Gal.
ASB23ADA	10 Gal.
ASB24ADA	10 Gal.
ASB30ADA	12 Gal.
ASB35ADA	16 Gal.
ASB47ADA	25 Gal.

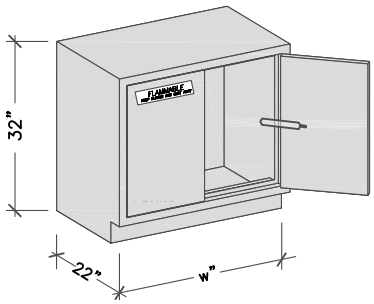

Flammable Storage Cabinets

- Meets NFPA, FM, UL standards.
- Use under counters, under fume hoods or in stand-alone applications.
- Double-wall 18 ga. construction w / 1.5" air space.
- Pneumatic self-closing door. Doors have a 165° fusible link that automatically closes the door in case of a fire.
- 3 point locking door mechanism with keyed lock.
- Chemical-resistant interior and exterior finish.
- Includes one adjustable shelf.
- 18 ga., 2" sill at bottom to retain spills.
- Two spark arrester vent holes are provided in back of cabinet for use with an optional VKFLAM vent kits.
- A removable panel is provided in the back of the cabinet for access to plumbing.

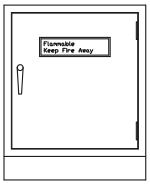

Model	Width
FSB18ADA	18"
FSB23ADA	23"
FSB24ADA	24"

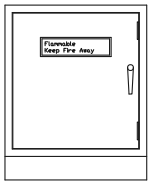

Model	Width
FSB18ADAL	18"
FSB23ADAL	23"
FSB24ADAL	24"

L= Left Hinged Door

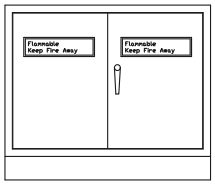

Model	Width
FSB30ADA	30"
FSB35ADA	35"
FSB47ADA	47"

Model	Capacity
FSB18ADA	8 Gal.
FSB23ADA	10 Gal.
FSB24ADA	10 Gal.
FSB30ADA	12 Gal.
FSB35ADA	16 Gal.
FSB47ADA	25 Gal.

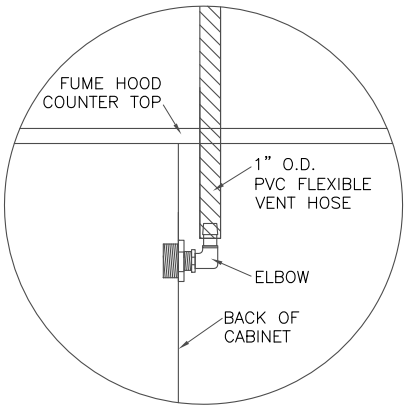

Acid and Vacuum Cabinet Vent Kit

- For connection from acid cabinet to fume hood ducting.
- Includes an 8' long, 1" diameter O.D. PVC flexible hose.
- Connection to ducting by others. Connection hardware to ducting to be provided by others.
- A threaded elbow connection is provided for attachment to back of cabinet.

Model	Hose Length
VKACID	8'
VKVAC	8'

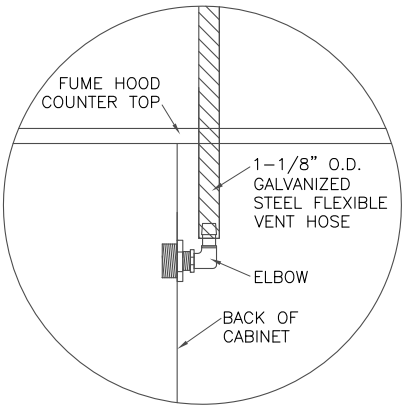

Flammable Cabinet Vent Kit

- For connection from flammable cabinet to fume hood ducting.
- Includes an 8' long,1-1/8" diameter O.D. galvanized steel flexible hose.
- Connection to ducting by others. Connection hardware to ducting to be provided by others.
- A threaded elbow connection is provided for attachment to back of cabinet.

Model	Hose Length
VKFLAM	8'

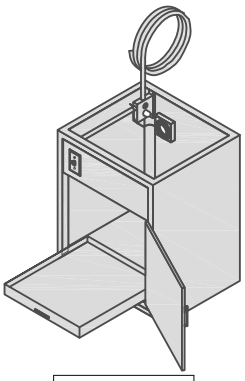

Vacuum Pump Cabinets - With Floor

- With a floor and pull out bottom shelf.
- Designed with pre-wired electrical package, pilot light switch, interior duplex receptacle and exhaust fan.
- One 8ft. electrical conduit whip is provided with each cabinet.
- 35", 42", and 47" wide cabinets have 2 electrical packages.
- Sound deadening interior insulation.
- A vent hole is provided in the back of cabinet for use with VKVAC vent kit.

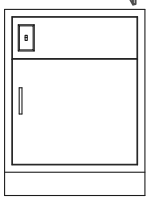

Model	Width
VAC23ADAF	23"
VAC24ADAF	24-1/8"

F = Floor & Pull Out Shelf

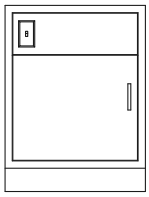

Model	Width
VAC23ADALF	23"
VAC24ADALF	24-1/8"

L = Left Hinged Door
F = Floor & Pull Out Shelf

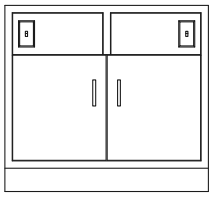

Model	Width
VAC30ADAF	30"
VAC35ADAF	35"
VAC42ADAF	42"
VAC47ADAF	47"

F = Floor & Pull Out Shelf

Vacuum Pump Cabinets - Without Floor

- Without a floor for optional mobile platform
- Designed with pre-wired electrical package, pilot light switch, interior duplex receptacle and exhaust fan.
- One 8ft. electrical conduit whip is provided with each cabinet.
- 35", 42", and 47" wide cabinets have 2 electrical packages.
- Sound deadening interior insulation.
- A vent hole is provided in the back of cabinet for use with VKVAC vent kit.

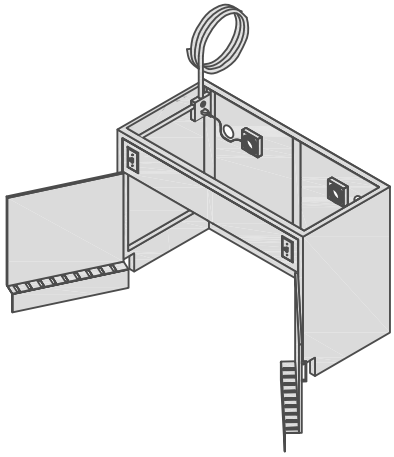

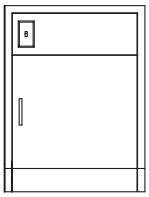

Model	Width
VAC23ADA	23"
VAC24ADA	24-1/8"

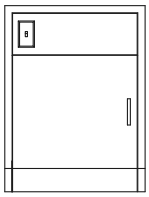

Model	Width
VAC23ADAL	23"
VAC24ADAL	24-1/8"

L = Left Hinged Door

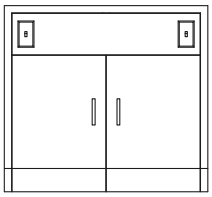

Model	Width
VAC30ADA	30"
VAC35ADA	35"
VAC42ADA	42"
VAC47ADA	47"

Mobile Platform

- Mobile platform for use with vacuum pump cabinets.
- Lipped platform has 4 casters.
- 16" deep X 5-1/2" high. Includes a 2" high lip on 4 sides.

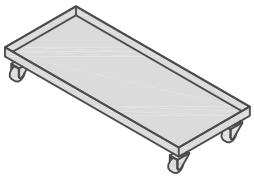

Model	Width
MP-24	19" w Fits 24" Cabinet
MP-30	25" w Fits 30" Cabinet
MP-35	30" w Fits 35" Cabinet
MP-42	37" w Fits 42" Cabinet
MP-47	42" w Fits 47" Cabinet

Base Cabinets

STANDING HEIGHT - 35 3/4”

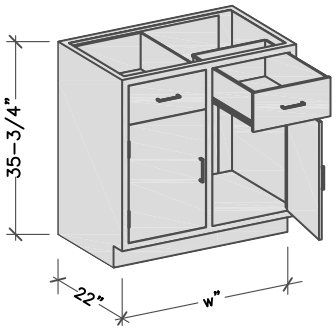

The HLF Advantages:

- Inset steel - flush face construction.
- Standing height cabinets are 35-3/4" h. and 22"d. Widths as shown below.
- Open cabinets have 2 adjustable shelves
- Cupboard cabinets have one adjustable shelf.
- Open and cabinets with doors have removable back panels.
- For locks, specify -LK at the end of the product number.

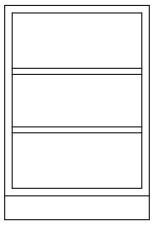

Model	Width
AJ15H	15"
AJ18H	18-1/8"
AJ24H	24-1/8"

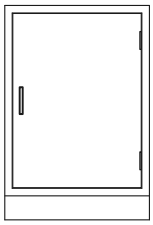

Model	Width
AA15H	15"
AA18H	18-1/8"
AA24H	24-1/8"

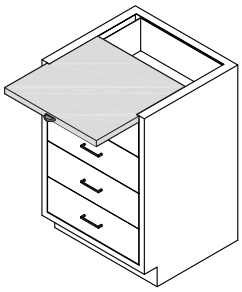

Optional Pull Boards

- Pull boards are available on any 15", 18", and 24" wide cabinets. In order for pull boards to be added to 30", 35", 42", or 47" wide base cabinets, they must have a center vertical rail. Specify pull boards for left, right, or both sides for 30" thru 47" wide base cabinets. To add pull boards specify -PB at the end of the model number.

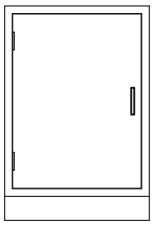

Model	Width
AA15HL	15"
AA18HL	18-1/8"
AA24HL	24-1/8"

L=Left Hinged Door

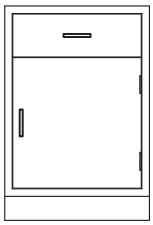

Model	Width
AB15H	15"
AB18H	18-1/8"
AB24H	24-1/8"

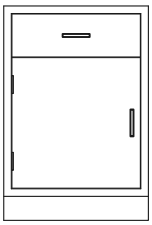

Model	Width
AB15HL	15"
AB18HL	18-1/8"
AB24HL	24-1/8"

L=Left Hinged Door

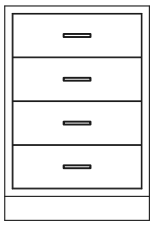

Model	Width
AE15H	15"
AE18H	18-1/8"
AE24H	24-1/8"

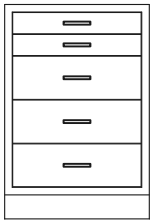

Model	Width
AF18H	18-1/8"
AF24H	24-1/8"

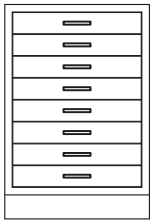

Model	Width
AH18H	18-1/8"
AH24H	24-1/8"

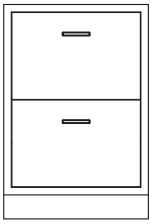

Model	Width
AI18H	18-1/8"
AI24H	24-1/8"

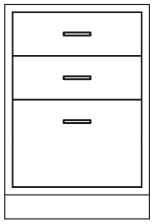

Model	Width
AK18H	18-1/8"
AK24H	24-1/8"

Base Cabinets

STANDING HEIGHT - 35 3/4”

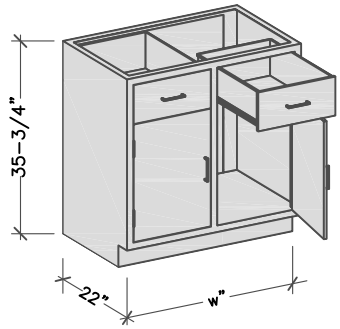

The HLF Advantages:

- Inset steel - flush face construction.
- Standing height cabinets are 35-3/4" h. and 22"d. Widths as shown below.
- Open cabinets have 2 adjustable shelves
- Cupboard cabinets have one adjustable shelf.
- Open and cabinets with doors have removable back panels.
- For locks, specify -LK at the end of the product number.

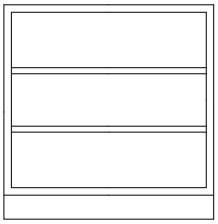

Model	Width
DY30H	30"
DY35H	35"
DY42H	42"
DY47H	47"

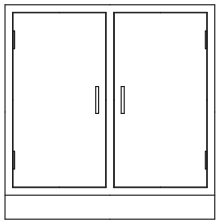

Model	Width
DA30H	30"
DA35H	35"
DA42H	42"
DA47H	47"

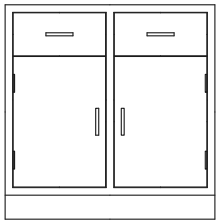

Model	Width
DD30H	30"
DD35H	35"
DD42H	42"
DD47H	47"

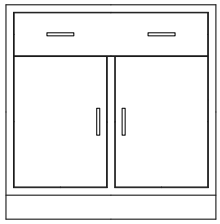

Model	Width
DC30H	30"
DC35H	35"
DC42H	42"
DC47H	47"

Model	Width
DE30H	30"
DE35H	35"
DE42H	42"
DE47H	47"

Model	Width
DF30H	30"
DF35H	35"
DF42H	42"
DF47H	47"

Model	Width
DG30H	30"
DG35H	35"
DG42H	42"
DG47H	47"

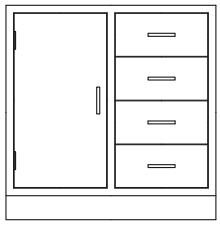

Model	Width
DG30HLC	30"
DG35HLC	35"
DG42HLC	42"
DG47HLC	47"

LC= Left Cupboard Door

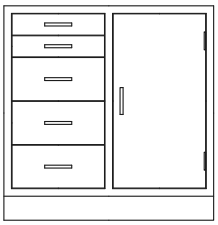

Model	Width
DH30H	30"
DH35H	35"
DH42H	42"
DH47H	47"

Model	Width
DH30HLC	30"
DH35HLC	35"
DH42HLC	42"
DH47HLC	47"

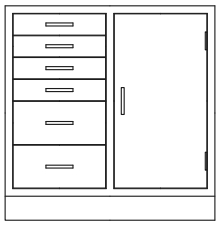

Model	Width
DI30H	30"
DI35H	35"
DI42H	42"
DI47H	47"

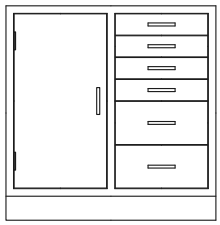

Model	Width
DI30HLC	30"
DI35HLC	35"
DI42HLC	42"
DI47HLC	47"

Base Cabinets

STANDING HEIGHT - 35 3/4”

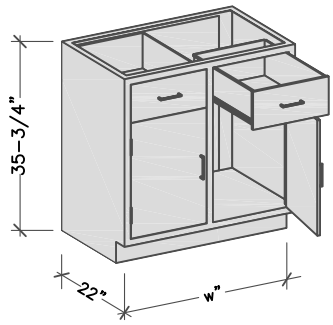

The HLF Advantages:

- Inset steel - flush face construction.
- Standing height cabinets are 35-3/4" h. and 22"d. Widths as shown below.
- Open cabinets have 2 adjustable shelves
- Cupboard cabinets have one adjustable shelf.
- Open and cabinets with doors have removable back panels.
- For locks, specify -LK at the end of the product number.

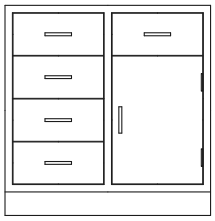

Model	Width
DK30H	30"
DK35H	35"
DK42H	42"
DK47H	47"

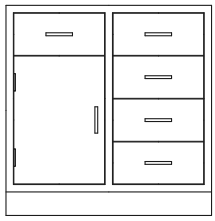

Model	Width
DK30HLC	30"
DK35HLC	35"
DK42HLC	42"
DK47HLC	47"

LC = Left Cupboard Door

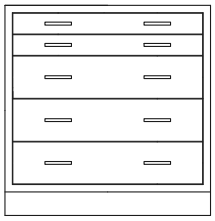

Model	Width
DN30H	30"
DN35H	35"
DN42H	42"
DN47H	47"

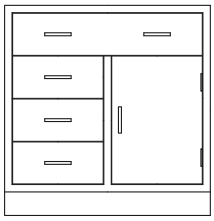

Model	Width
DO30H	30"
DO35H	35"
DO42H	42"
DO47H	47"

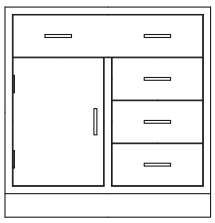

Model	Width
DO30HLC	30"
DO35HLC	35"
DO42HLC	42"
DO47HLC	47"

LC = Left Cupboard Door

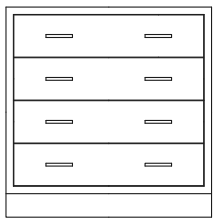

Model	Width
DP30H	30"
DP35H	35"
DP42H	42"
DP47H	47"

Model	Width
DQ30H	30"
DQ35H	35"
DQ42H	42"
DQ47H	47"

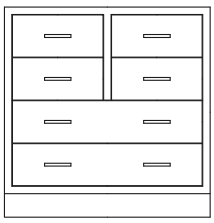

Model	Width
DR30H	30"
DR35H	35"
DR42H	42"
DR47H	47"

Model	Width
DS30H	30"
DS35H	35"
DS42H	42"
DS47H	47"

Model	Width
DT30H	30"
DT35H	35"
DT42H	42"
DT47H	47"

Model	Width
DZ30H	30"
DZ35H	35"
DZ42H	42"
DZ47H	47"

Model	Width
DZ30HLC	30"
DZ35HLC	35"
DZ42HLC	42"
DZ47HLC	47"

LC = Left Cupboard Door

Corner Base Cabinets

STANDING HEIGHT - 35 3/4”

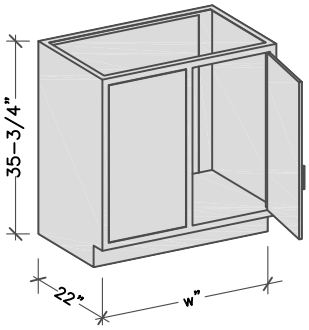

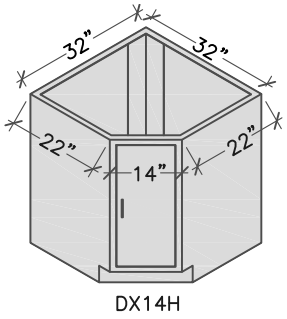

DX14H

The HLF Advantages:

- Inset steel - flush face construction.
- Standing height cabinets are 35-3/4" h. Widths as shown below.
- DX diagonal corner cabinets do not have shelves.
- For locks, specify -LK at the end of the product number.

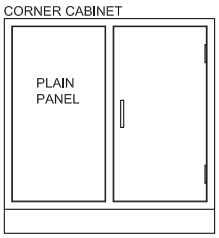

Model	Width
DW30H	30"
DW35H	35"
DW42H	42"
DW47H	47"

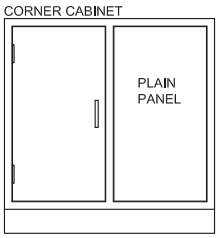

Model	Width
DW30HLC	30"
DW35HLC	35"
DW42HLC	42"
DW47HLC	47"

LC= Left Cupboard Door

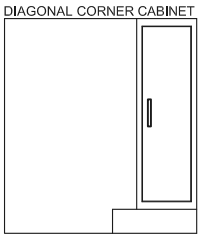

Model	Width
DX14H	32"

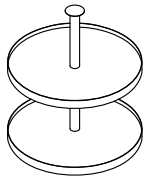

Model	
LS-1	1-Tier "Lazy Susan"
LS-2	2-Tier "Lazy Susan"

Fits into DX style corner cabinet.

Sink Cabinets

STANDING HEIGHT - 35 3/4”

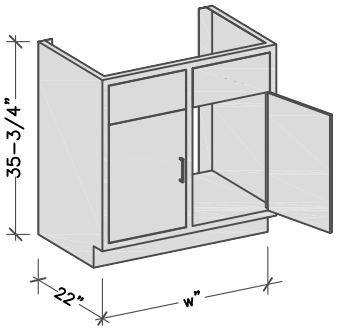

The HLF Advantages:

- Inset steel - flush face construction.
- Standing height cabinets are 35-3/4" h. Widths as shown below.
- Sink cabinets have a lower rear panel.
- For locks specify -LK at the end of the product number.
- If a cutout is required at the front toe kick for a foot-controlled fixture application, specify -FCC after the sink cabinet model number.

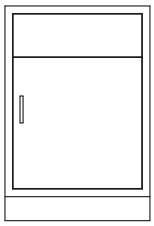

Model	Width
AC18H	18-1/8"
AC24H	24-1/8"

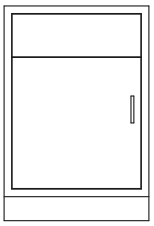

Model	Width
AC18HL	18-1/8"
AC24HL	24-1/8"

L = Left Hinged Door

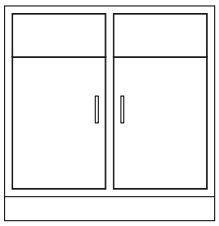

Model	Width	
DB30H	30"	
DB35H	35"	↻
DB42H	42"	
DB47H	47"	↻
DB52H	52"	
DB58H	58"	↻

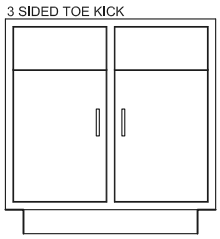

Model	Width
DB47H3S	47"
DB52H3S	52"
DB58H3S	58"

Specialty Cabinets

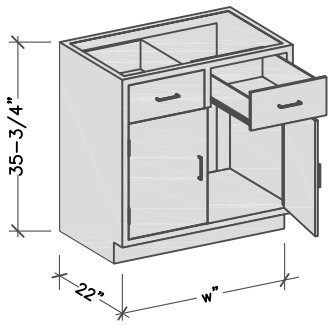

The HLF Advantages:

- Inset steel - flush face construction.
- Standing height cabinets are 35-3/4" h. Widths as shown below.
- Cupboard cabinets have one adjustable shelf.
- Double door cabinets have no center vertical rail between the doors.
- Cabinets with doors have removable back panels.
- For locks, specify -LK at the end of the product number.

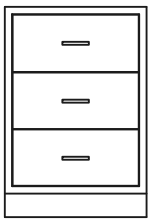

Model	Width
CE18H	18-1/8"
CE24H	24-1/8"

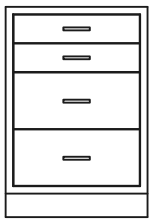

Model	Width
CF18H	18-1/8"
CF24H	24-1/8"

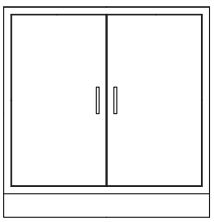

Model	Width
CA30H	30"
CA35H	35"
CA42H	42"
CA47H	47"

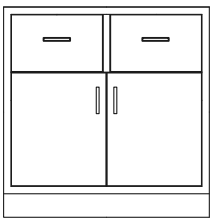

Model	Width
CD30H	30"
CD35H	35"
CD42H	42"
CD47H	47"

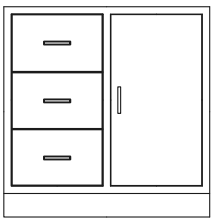

Model	Width
CG30H	30"
CG35H	35"
CG42H	42"
CG47H	47"

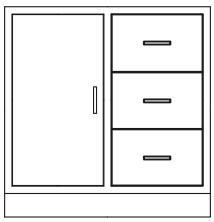

Model	Width
CG30HLC	30"
CG35HLC	35"
CG42HLC	42"
CG47HLC	47"

LC = Left Cupboard Door

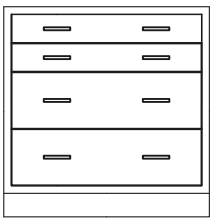

Model	Width
CN30H	30"
CN35H	35"
CN42H	42"
CN47H	47"

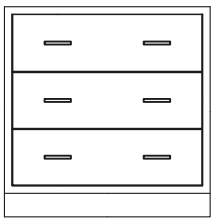

Model	Width
CP30H	30"
CP35H	35"
CP42H	42"
CP47H	47"

Model	Width
CT30H	30"
CT35H	35"
CT42H	42"
CT47H	47"

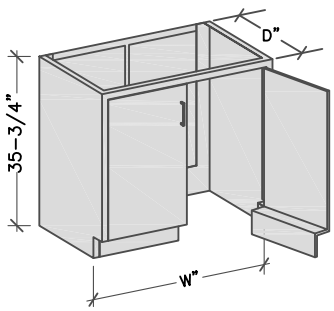

Equipment Cabinet

- Used for large or roll-in equipment.
- Cabinet has integral toe kick without a floor.
- Full height back with removable back panel.
- Manufactured in 22" and 28" deep cabinets.

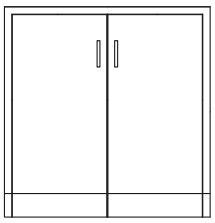

Model	Depth	Width
CU47HA	22"	47"
CU47HB	28"	47"
CU52HA	22"	52"
CU52HB	28"	52"
CU58HA	22"	58"
CU58HB	28"	58"

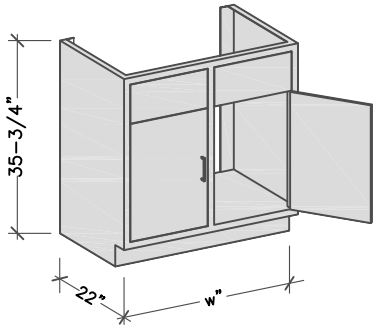

Fume Hood Base Cabinets

- Inset steel - flush face construction.
- Designed for under fume hood applications or used when sinks are required inside fume hood.
- Provided without shelves.
- For locks, specify -LK at the end of the product number.

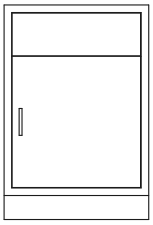

Model	Width
FHB18H	18-1/8"
FHB23H	23"
FHB24H	24-1/8"

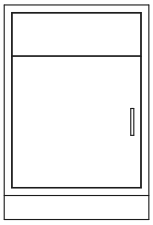

Model	Width
FHB18HL	18-1/8"
FHB23HL	23"
FHB24HL	24-1/8"

L = Left Hinged Door

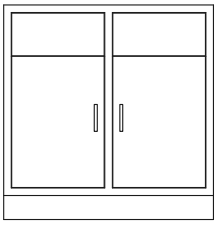

Model	Width
FHB30H	30"
FHB35H	35"
FHB47H	47"
FHB58H	58"

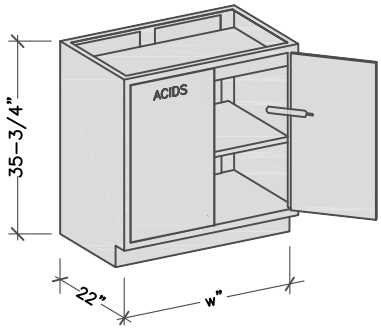

Acid / Corrosive Storage Cabinets

- Designed for under counter and under fume hood applications, for storage of corrosive materials.
- Pneumatic self-closing door. Doors have a 165° fusible link that automatically closes the doors in case of a fire.
- 3 point locking door mechanism with keyed lock.
- Includes one adjustable shelf.
- Two vent holes are provided in back of cabinet for use with an optional VKACID vent kit.
- Lined with corrosive resistant liner board.

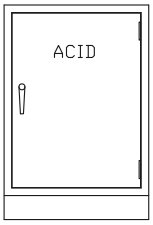

Model	Width
ASB18H	18"
ASB23H	23"
ASB24H	24"

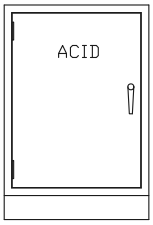

Model	Width
ASB18HL	18"
ASB23HL	23"
ASB24HL	24"

L = Left Hinged Door

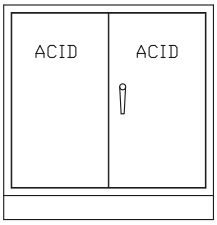

Model	Width
ASB30H	30"
ASB35H	35"
ASB47H	47"

Model	Capacity
ASB18H	10 Gal.
ASB23H	12 Gal.
ASB24H	12 Gal.
ASB30H	16 Gal.
ASB35H	18 Gal.
ASB47H	27 Gal.

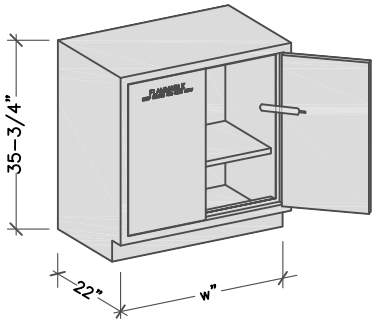

Flammable Storage Cabinets

- Meets NFPA, FM, UL standards.
- Use under counters, under fume hoods or in stand-alone applications.
- Double-wall 18 ga. construction w / 1.5" air space.
- Pneumatic self-closing door. Doors have a 165° fusible link that automatically closes the door in case of a fire.
- 3 point locking door mechanism with keyed lock.
- Chemical-resistant interior and exterior finish.
- Includes one adjustable shelf.
- 18 ga., 2" sill at bottom to retain spills.
- Two spark arrester vent holes are provided in back of cabinet for use with an optional VKFLAM vent kits.
- A removable panel is provided in the back of the cabinet for access to plumbing.

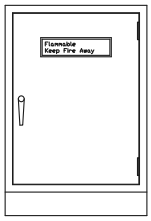

Model	Width
FSB18H	18"
FSB23H	23"
FSB24H	24"

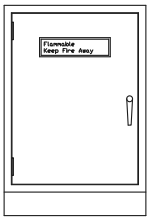

Model	Width
FSB18HL	18"
FSB23HL	23"
FSB24HL	24"

L = Left Hinged Door

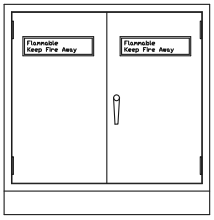

Model	Width
FSB30H	30"
FSB35H	35"
FSB47H	47"

Model	Capacity
FSB18H	10 Gal.
FSB23H	12 Gal.
FSB24H	12 Gal.
FSB30H	16 Gal.
FSB35H	18 Gal.
FSB47H	27 Gal.

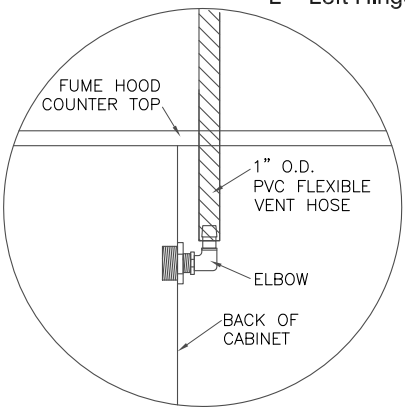

Acid and Vacuum Cabinet Vent Kit

- For connection from acid cabinet to fume hood ducting.
- Includes an 8' long, 1" diameter O.D. PVC flexible hose.
- Connection to ducting by others. Connection hardware to ducting to be provided by others.
- A threaded elbow connection is provided for attachment to back of cabinet.

Model	Hose Length
VKACID	8'
VKVAC	8'

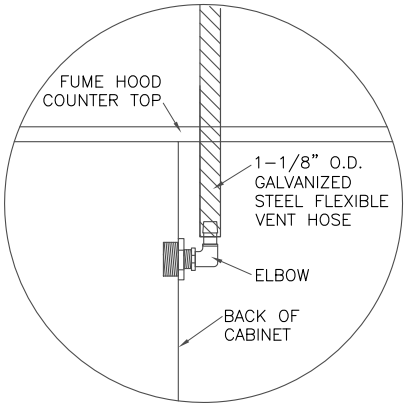

Flammable Cabinet Vent Kit

- For connection from flammable cabinet to fume hood ducting.
- Includes an 8' long,1-1/8" diameter O.D. galvanized steel flexible hose.
- Connection to ducting by others. Connection hardware to ducting to be provided by others.
- A threaded elbow connection is provided for attachment to back of cabinet.

Model	Hose Length
VKFLAM	8'

Vacuum Pump Cabinets - With Floor

- With a floor and pull out bottom shelf.
- Designed with pre-wired electrical package, pilot light switch, interior duplex receptacle and exhaust fan.
- One 8ft. electrical conduit whip is provided with each cabinet.
- 35", 42", and 47" wide cabinets have 2 electrical packages.
- Sound deadening interior insulation.
- A vent hole is provided in the back of cabinet for use with VKVAC vent kit.

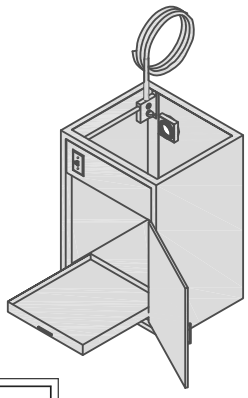

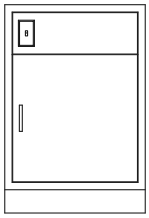

Model	Width
VAC23HF	23"
VAC24HF	24-1/8"

F = Floor & Pull Out Shelf

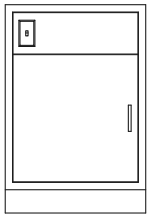

Model	Width
VAC23HLF	23"
VAC24HLF	24-1/8"

L = Left Hinged Door
F = Floor & Pull out Shelf

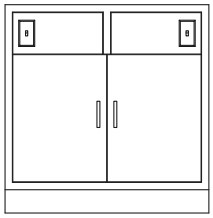

Model	Width
VAC30HF	30"
VAC35HF	35"
VAC42HF	42"
VAC47HF	47"

F = Floor & Pull Out Shelf

Vacuum Pump Cabinets - Without Floor

- Without a floor for optional mobile platform.
- Designed with pre-wired electrical package, pilot light switch, interior duplex receptacle and exhaust fan.
- One 8ft. electrical conduit whip is provided with each cabinet.
- 35", 42", and 47" wide cabinets have 2 electrical packages.
- Sound deadening interior insulation.
- A vent hole is provided in the back of cabinet for use with VKVAC vent kit.

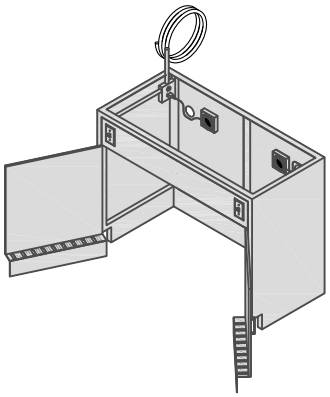

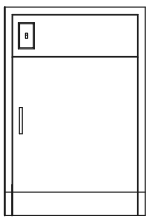

Model	Width
VAC23H	23"
VAC24H	24-1/8"

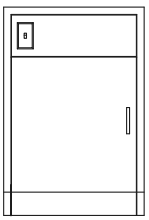

Model	Width
VAC23HL	23"
VAC24HL	24-1/8"

L = Left Hinged Door

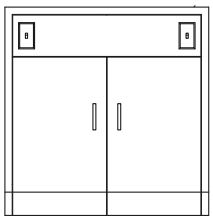

Model	Width
VAC30H	30"
VAC35H	35"
VAC42H	42"
VAC47H	47"

Mobile Platform

- Mobile platform for use with vacuum pump cabinets.
- Lipped platform has 4 casters.
- 16" deep X 5-1/2" high. Includes a 2" high lip on 4 sides.

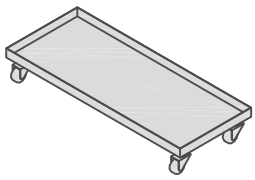

Model	Width
MP-24	19" w Fits 24" Cabinet
MP-30	25" w Fits 30" Cabinet
MP-35	30" w Fits 35" Cabinet
MP-42	37" w Fits 42" Cabinet
MP-47	42" w Fits 47" Cabinet

Cabinet Accessories

Cabinet Locks

- Used on drawers or doors for base, wall, and tall cabinets.
- Specify -LK at the end of the cabinet model number for locks on all door and drawers on the cabinet.

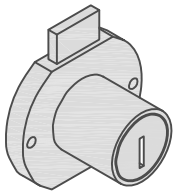

Model
-LK

Finished Backs

- Used to finish the back of base cabinets.
- Installed at the factory.
- Specify -BFB at the end of the cabinet model number.

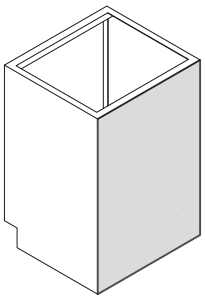

Model
-BFB

Pull Out Shelves

- Installs in base cabinet cupboards or open cabinets.
- Pull out shelves have 2" high lips on all 4 sides.
- Unless otherwise specified, shelf will be at bottom of cabinet.
- Specify -PS at the end of the cabinet model number.

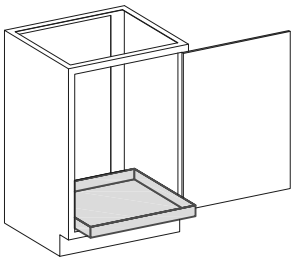

Model
-PS

Pull Boards

- Pull boards are available on any 15", 18", and 24" wide cabinets. In order for pull boards to be added to 30", 35", 42", or 47" wide base cabinets, they must have a center vertical rail. Specify pull boards for left, right, or both sides for 30" thru 47" wide base cabinets. To add pull boards, specify -PB at the end of the model number.

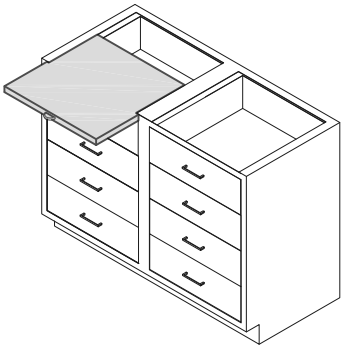

Model
-PB

Full Extension Drawer Slides

- Full extension, ball bearing, 100 lb. capacity drawer slides are provided as standard on HLF cabinets.

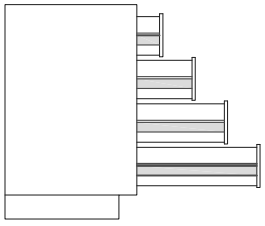

Base Cabinet Fillers and Scribes

Low Height Filler Panel

- Used between 2 cabinets or between a cabinet and the wall.
- Specify -T if the panel needs to be field trimmed with an SA1 double-slip angle.

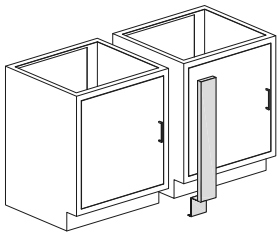

Model	Width	Height
BF1L*	1.5"	29-3/4"
BF4L	4"	29-3/4"
BF6L	6"	29-3/4"
BF8L	8"	29-3/4"
BF12L	12"	29-3/4"
BF14L	14"	29-3/4"
BF18L	18"	29-3/4"
BF24L	24"	29-3/4"
BF30L	30"	29-3/4"
BF35L	35"	29-3/4"
BF42L	42"	29-3/4"
BF47L	47"	29-3/4"
BF58L	58"	29-3/4"
BF60L	60"	29-3/4"

* Provided without toe kick

ADA Height Filler Panel

- Used between 2 cabinets or between a cabinet and the wall.
- Specify -T if the panel needs to be field trimmed with an SA1 double-slip angle.

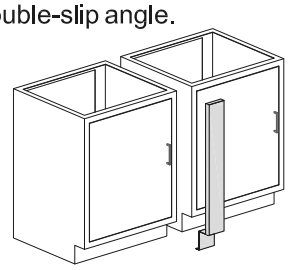

Model	Width	Height
BF1ADA*	1.5"	32"
BF4ADA	4"	32"
BF6ADA	6"	32"
BF8ADA	8"	32"
BF12ADA	12"	32"
BF14ADA	14"	32"
BF18ADA	18"	32"
BF24ADA	24"	32"
BF30ADA	30"	32"
BF35ADA	35"	32"
BF42ADA	42"	32"
BF47ADA	47"	32"
BF58ADA	58"	32"
BF60ADA	60"	32"

* Provided without toe kick

Standing Height Filler Panel

- Used between 2 cabinets or between a cabinet and the wall.
- Specify -T if the panel needs to be field trimmed with an SA1 double-slip angle.

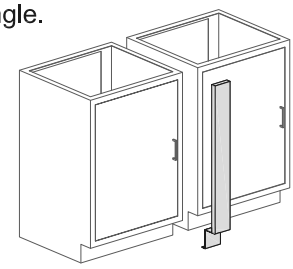

Model	Width	Height
BF1M*	1.5"	35-3/4"
BF4M	4"	35-3/4"
BF6M	6"	35-3/4"
BF8M	8"	35-3/4"
BF12M	12"	35-3/4"
BF14M	14"	35-3/4"
BF18M	18"	35-3/4"
BF24M	24"	35-3/4"
BF30M	30"	35-3/4"
BF35M	35"	35-3/4"
BF42M	42"	35-3/4"
BF47M	47"	35-3/4"
BF58L	58"	35-3/4"
BF60L	60"	35-3/4"

* Provided without toe kick

End Filler Panel

- Used between the base cabinet and the wall.
- Includes a double-slip angle in case panels need to be field trimmed.

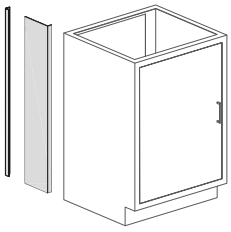

Model	Width	Height
PSF1L	1"	29-3/4"
PSF1ADA	1"	32"
PSF1M	1"	35-3/4"
PSF7L	7"	29-3/4"
PSF7ADA	7"	32"
PSF7M	7"	35-3/4"
PSF13L	13"	29-3/4"
PSF13ADA	13"	32"
PSF13M	13"	35-3/4"

Island Filler Panel

- Used between 2 base cabinets at island benches.
- Specify -T if the panel needs to be field trimmed with an SA1 double-slip angle.

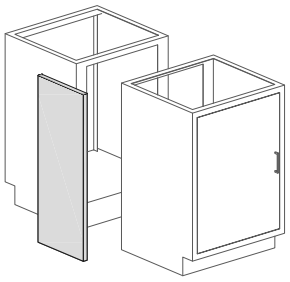

Double-Slip Angle

- Field trimmable for use with any height cabinet.

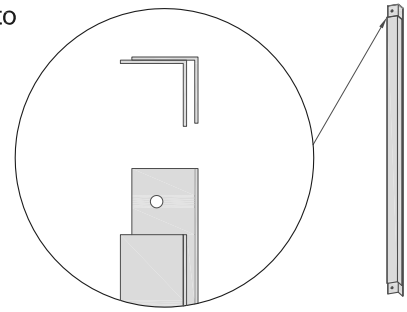

Model	Width	Height
SA1	1"	35-3/4"

Island Filler Panel

Model	Width	Height
BCF2L	2"	29-3/4"
BCF2ADA	2"	32"
BCF2M	2"	35-3/4"
BCF7L	7"	29-3/4"
BCF7ADA	7"	32"
BCF7H	7"	35-3/4"

Model	Width	Height
BCF14L	14"	29-3/4"
BCF14ADA	14"	32"
BCF14M	14"	35-3/4"
BCF26L	26"	29-3/4"
BCF26ADA	26"	32"
BCF26M	26"	35-3/4"

Drawer Frames, Apron Rails

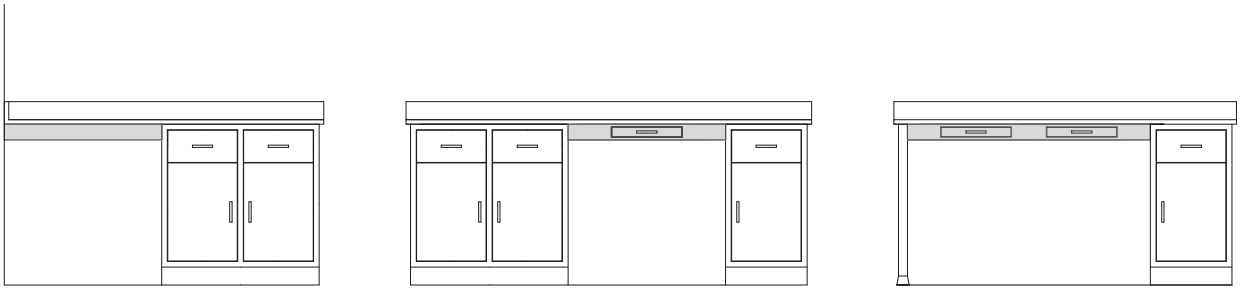

Apron Rails and Drawer Frames

- Apron rails and drawer frames can be used as a knee space between two cabinets, between a cabinet and a wall, or between a cabinet and legs or end support panels.
- Apron rails or drawer frames are NOT designed to be used between two sets of legs as a freestanding table. For freestanding tables see our Agility / Mobility section of the catalog.

Apron Rails - 3-1/2" h

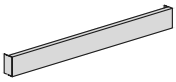

- 3-1/2" high apron.

Model	Height	Width
A24	3-1/2"	24"
A30	3-1/2"	30"
A35	3-1/2"	35"
A42	3-1/2"	42"
A47	3-1/2"	47"
A54	3-1/2"	54"
A60	3-1/2"	60"
A66	3-1/2"	66"
A72	3-1/2"	72"

Apron Rails - 2" h

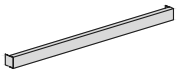

- 2" high apron.

Model	Height	Width
A224	2"	24"
A230	2"	30"
A235	2"	35"
A242	2"	42"
A247	2"	47"
A254	2"	54"
A260	2"	60"
A266	2"	66"
A272	2"	72"

Drawer Frames One Pencil Drawer

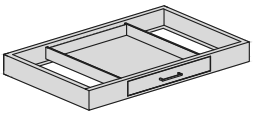

- 3-1/2" high frame with 2" high drawer.

Model	Width	Depth
DH-1-24A	24"	22"
DH-1-24B	24"	28"
DH-1-30A	30"	22"
DH-1-30B	30"	28"
DH-1-35A	35"	22"
DH-1-35B	35"	28"
DH-1-42A	42"	22"
DH-1-42B	42"	28"
DH-1-47A	47"	22"
DH-1-47B	47"	28"

Drawer Frames Two Pencil Drawers

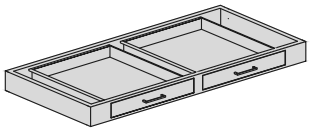

- 3-1/2" high frame with 2" high drawer.

Model	Width	Depth
DH-2-47A	47"	22"
DH-2-47B	47"	28"
DH-2-54A	54"	22"
DH-2-54B	54"	28"
DH-2-58A	58"	22"
DH-2-58B	58"	28"
DH-2-60A	60"	22"
DH-2-60B	60"	28"
DH-2-66A	66"	22"
DH-2-66B	66"	28"

Toe Space Filler Panel

- Used at corner where cabinets meet at a 90° angle.
- 18 ga. steel painted to match cabinets.

Model
TSF

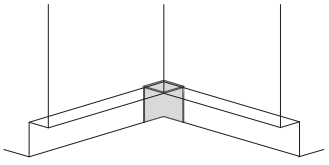

Drawer Frames, Apron Rails & Leg Assemblies

Single Leg

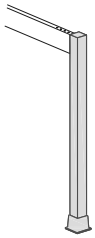

- Used with apron rails or drawer frames.
- 2" x 2" 16 ga. construction.
- Leg levelers and vinyl shoe included.

Model	Height
L30	29-3/4"
L32	32"
L36	35-3/4"

Single Flanged Leg

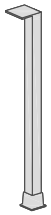

- Used to provide added support of counter tops.
- 4" x 4" plate, offset at the top with holes for attachment to counter top.
- Leg levelers and vinyl shoe included.

Model	Height
FL30	29-3/4"
FL32	32"
FL36	35-3/4"

H-Leg

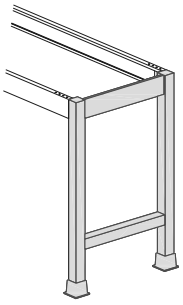

- Used with apron rails or drawer frames.
- Leg levelers and vinyl shoes provided.

Model	Height	Depth
HL30A	29-3/4"	22"
HL30B	29-3/4"	28"
HL32A	32"	22"
HL32B	32"	28"
HL36A	35-3/4"	22"
HL36B	35-3/4"	28"

Flanged H-Leg

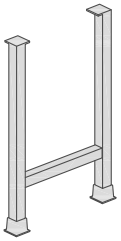

- Used to provide added support of counter tops.
- 4" x 4" plates, offset at the top with holes for attachment to counter top.
- Leg levelers and vinyl shoe included.

Model	Height	Depth
FHL30A	29-3/4"	22"
FHL30B	29-3/4"	28"
FHL32A	32"	22"
FHL32B	32"	28"
FHL36A	35-3/4"	22"
FHL36B	35-3/4"	28"

Table Cross Brace

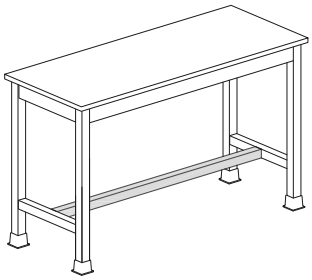

- Used as cross brace between H-Legs for added stability.
- Recommended for tables 60" and over.
- Bolt on assembly
- Required if a bottom shelf is used.

Model	Width	Table / Top Size
CB30	24"	30"
CB36	30"	36"
CB42	36"	42"
CB48	42"	48"
CB54	48"	54"
CB60	54"	60"
CB66	60"	66"
CB72	66"	72"

End Support Panel

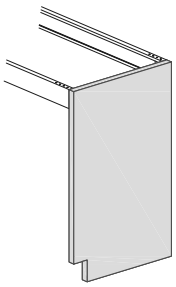

- Used in place of legs on one end of apron rails or drawer frames.
- Leg levelers provided.

Model	Height	Depth
HGL30A	29-3/4"	22"
HGL30B	29-3/4"	28"
HGL32A	32"	22"
HGL32B	32"	28"
HGL36A	35-3/4"	22"
HGL36B	35-3/4"	28"

Counter Top Support Brackets

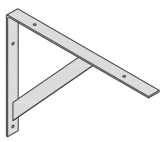

- Painted to match casework.
- In-wall backing required for support.

Model	Height	Depth
CSB21	20"	21"
CSB27	20"	27"

Knee Space Panels

USED WITHOUT DRAWER HOUSING OR REAR APRON RAIL

KSP Filler Panel Without a Rear Apron

- Full height panel, used when there is no rear apron or drawer frame.
- For use between 2 cabinets or between a cabinet and wall.
- Includes 1 each angle and slip angle for installation.
- KSPs can be field trimmed.

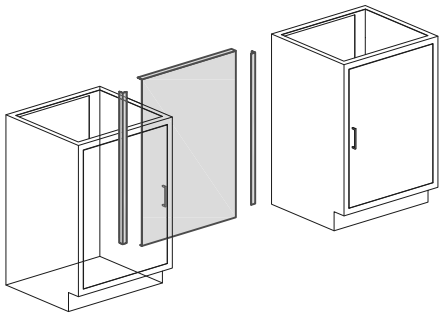

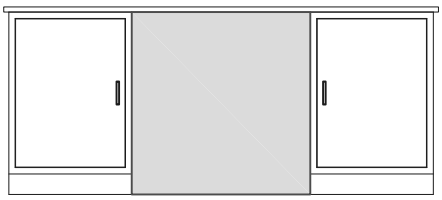

Model	Width	Height
KSP1829	18-1/8"	29-3/4"
KSP2429	24-1/8"	29-3/4"
KSP3029	30"	29-3/4"
KSP3529	35"	29-3/4"
KSP4729	47"	29-3/4"
KSP5829	58"	29-3/4"
KSP7029	70"	29-3/4"

Model	Width	Height
KSP1832	18-1/8"	32"
KSP2432	24-1/8"	32"
KSP3032	30"	32"
KSP3532	35"	32"
KSP4732	47"	32"
KSP5832	58"	32"
KSP7032	70"	32"

Model	Width	Height
KSP1835	18-1/8"	35"
KSP2435	24-1/8"	35"
KSP3035	30"	35"
KSP3535	35"	35"
KSP4735	47"	35"
KSP5835	58"	35"
KSP7035	70"	35"

Knee Space Panels

USED WITH DRAWER HOUSING OR REAR APRON RAIL

KSP Filler Panel With a Rear Apron

- Used when a rear apron or drawer frame is used.
- For use between 2 cabinets or between a cabinet and wall.
- Includes 1 each angle and slip angle for installation.
- KSPs can be field trimmed.

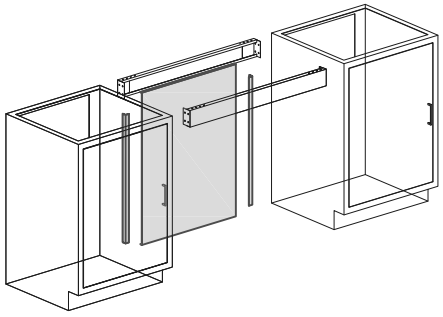

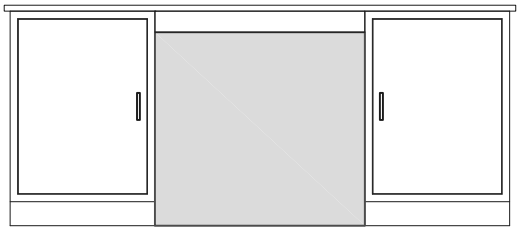

Model	Width	Height
KSP1826	18-1/8"	26"
KSP2426	24-1/8"	26"
KSP3026	30"	26"
KSP3526	35"	26"
KSP4726	47"	26"
KSP5826	58"	26"
KSP7026	70"	26"

Model	Width	Height
KSP1828	18-1/8"	28"
KSP2428	24-1/8"	28"
KSP3028	30"	28"
KSP3528	35"	28"
KSP4728	47"	28"
KSP5828	58"	28"
KSP7028	70"	28"

Model	Width	Height
KSP1832	18-1/8"	32"
KSP2432	24-1/8"	32"
KSP3032	30"	32"
KSP3532	35"	32"
KSP4732	47"	32"
KSP5832	58"	32"
KSP7032	70"	32"

Rear Enclosure Panels - REP

Rear Enclosure Panels

- Rear enclosure panels are used to enclose the back of cabinets or island benches when the counter depth is not deep enough for back to back cabinets.
- Panels are manufactured in Low, ADA, and Standard height panels to match our cabinet heights, and include leveling bolts in each corner.

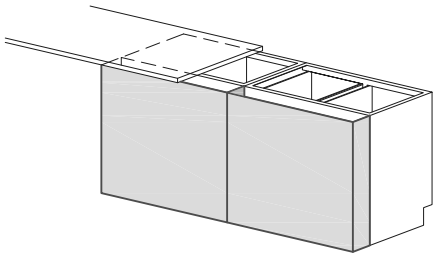

Sitting Height 29-3/4" x 6" Deep

Model	Width	Depth	Height
REP18L6	18-1/8"	6"	29-3/4"
REP24L6	24-1/8"	6"	29-3/4"
REP30L6	30"	6"	29-3/4"
REP35L6	35"	6"	29-3/4"
REP42L6	42"	6"	29-3/4"
REP47L6	47"	6"	29-3/4"
REP58L6	58"	6"	29-3/4"

Sitting Height 29-3/4" x 12" Deep

Model	Width	Depth	Height
REP18L12	18-1/8"	12"	29-3/4"
REP24L12	24-1/8"	12"	29-3/4"
REP30L12	30"	12"	29-3/4"
REP35L12	35"	12"	29-3/4"
REP42L12	42"	12"	29-3/4"
REP47L12	47"	12"	29-3/4"
REP58L12	58"	12"	29-3/4"

ADA Height 32" x 6" Deep

Model	Width	Depth	Height
REP18A6	18-1/8"	6"	32"
REP24A6	24-1/8"	6"	32"
REP30A6	30"	6"	32"
REP35A6	35"	6"	32"
REP42A6	42"	6"	32"
REP47A6	47"	6"	32"
REP58A6	58"	6"	32"

ADA Height 32" x 12" Deep

Model	Width	Depth	Height
REP18A12	18-1/8"	12"	32"
REP24A12	24-1/8"	12"	32"
REP30A12	30"	12"	32"
REP35A12	35"	12"	32"
REP42A12	42"	12"	32"
REP47A12	47"	12"	32"
REP58A12	58"	12"	32"

Standing Height 35-3/4" x 6" Deep

Model	Width	Depth	Height
REP18H6	18-1/8"	6"	35-3/4"
REP24H6	24-1/8"	6"	35-3/4"
REP30H6	30"	6"	35-3/4"
REP35H6	35"	6"	35-3/4"
REP42H6	42"	6"	35-3/4"
REP47H6	47"	6"	35-3/4"
REP58H6	58"	6"	35-3/4"

Standing Height 35-3/4" x 12" Deep

Model	Width	Depth	Height
REP18H12	18-1/8"	12"	35-3/4"
REP24H12	24-1/8"	12"	35-3/4"
REP30H12	30"	12"	35-3/4"
REP35H12	35"	12"	35-3/4"
REP42H12	42"	12"	35-3/4"
REP47H12	47"	12"	35-3/4"
REP58H12	58"	12"	35-3/4"

- 6" deep panels are typically used with 30" deep counter tops.

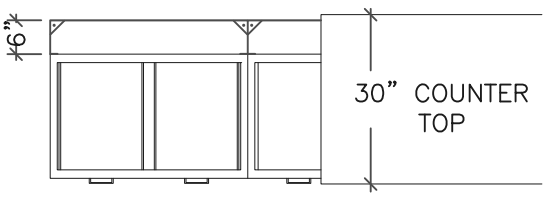

- 12" deep panels are typically used with 36" deep counter tops.

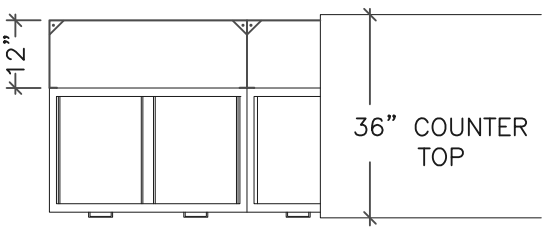

Custom Sizes

Specify the width, depth, and height for custom size Rear Enclosure Panels. REP__w X __d X __h

Wall Cabinet Details

HLF Wall Cabinets

Hanson wall cabinets are available in a variety of styles and sizes including custom designed models to meet your specific applications. They are designed for maximum storage capacity, and access.

- 24", 30", 36", and 48" high wall cabinets.
- Choice of 13" or 16" deep cabinets.
- Available in solid panel, framed or frameless glass doors and open style wall cabinets.
- Hinged or sliding door options.

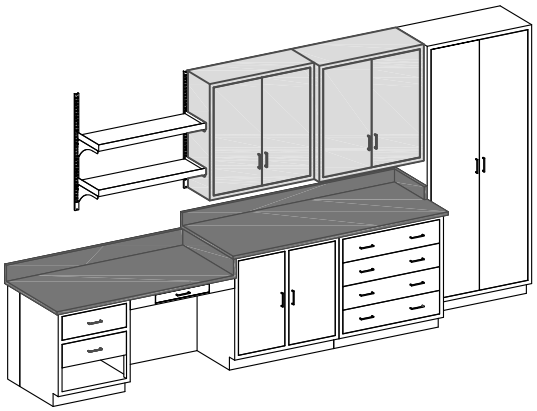

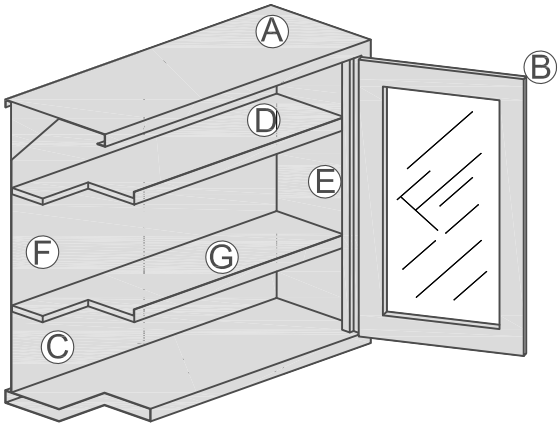

HLF Features and Benefits

A - Cabinet body design accepts multiple styles of doors.
B - 18 ga. double door fronts, with sound deadening full channeled edges.
C - 18 ga. cabinet bodies with flush seamless welded face.
D - 20 ga. adjustable shelves are included in open and cupboard cabinets.
E - Stainless steel 5 knuckle hinges on cabinet doors that close against neoprene rubber bumpers.
F - HLF cabinets have electrostatically applied, baked on powder coated epoxy paint finish for superior performance.
G - Front shelf lips are included on all shelves.

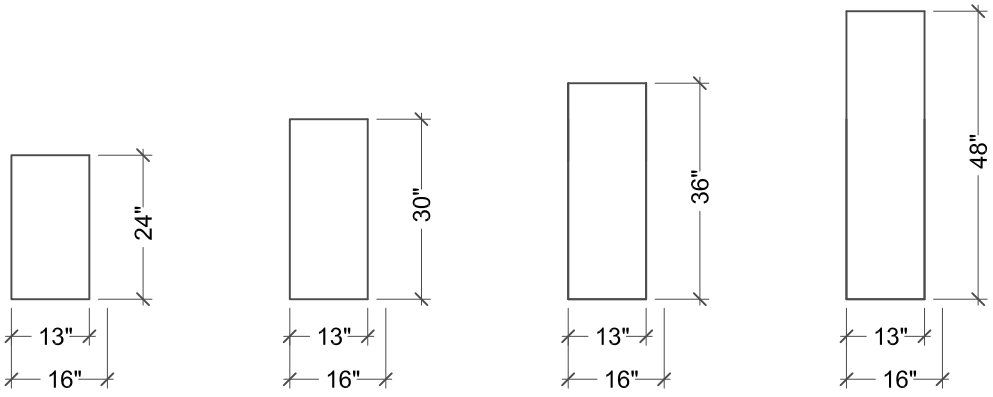

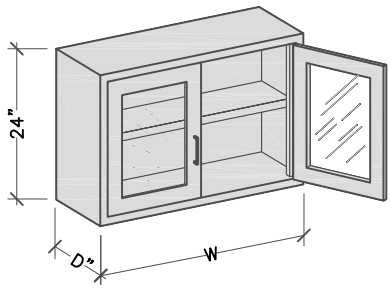

The HLF Advantages:

- Inset steel - flush face construction.
- Extra low height cabinets are 24" h. Width and depth as shown below.
- Furnished with 1 adjustable shelf.
- For locks, specify -LK at the end of the product number.

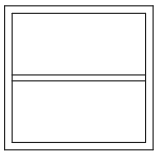

Open Cabinets

Model	Depth	Width
G18EL	13"	18-3/4"
G18EL16	16"	18-3/4"
G24EL	13"	24-3/4"
G24EL16	16"	24-3/4"

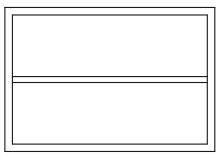

Model	Depth	Width
G30EL	13"	30"
G30EL16	16"	30"
G35EL	13"	35"
G35EL16	16"	35"
G42EL	13"	42"
G42EL16	16"	42"
G47EL	13"	47"
G47EL16	16"	47"

Hinged Solid Doors

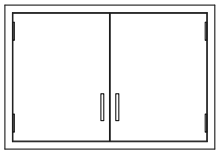

Model	Depth	Width
B30EL	13"	30"
B30EL16	16"	30"
B35EL	13"	35"
B35EL16	16"	35"
B42EL	13"	42"
B42EL16	16"	42"
B47EL	13"	47"
B47EL16	16"	47"

Sliding Solid Doors

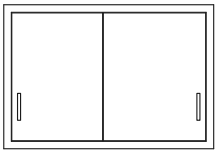

Model	Depth	Width
C30EL	13"	30"
C30EL16	16"	30"
C35EL	13"	35"
C35EL16	16"	35"
C42EL	13"	42"
C42EL16	16"	42"
C47EL	13"	47"
C47EL16	16"	47"

Hinged Solid Doors

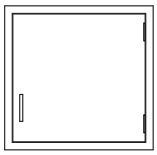

Model	Depth	Width
A18EL	13"	18-3/4"
A18EL16	16"	18-3/4"
A24EL	13"	24-3/4"
A24EL16	16"	24-3/4"

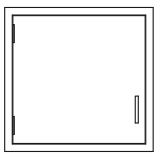

Model	Depth	Width
A18ELL	13"	18-3/4"
A18ELL16	16"	18-3/4"
A24ELL	13"	24-3/4"
A24ELL16	16"	24-3/4"

L = Left Hinged Door

Framed Glass Hinged Doors

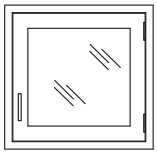

Model	Depth	Width
D18EL	13"	18-3/4"
D18EL16	16"	18-3/4"
D24EL	13"	24-3/4"
D24EL16	16"	24-3/4"

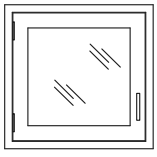

Model	Depth	Width
D18ELL	13"	18-3/4"
D18ELL16	16"	18-3/4"
D24ELL	13"	24-3/4"
D24ELL16	16"	24-3/4"

L = Left Hinged Door

Wall Cabinets

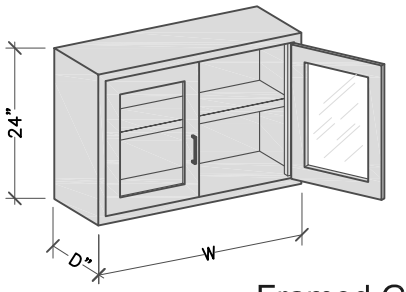

The HLF Advantages:

- Inset steel - flush face construction.
- Extra low height cabinets are 24" h. Width and depth as shown below.
- Furnished with 1 adjustable shelf.
- For locks, specify -LK at the end of the product number.

Framed Glass Hinged Doors

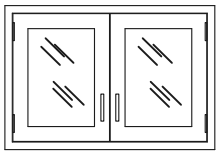

Model	Depth	Width
E30EL	13"	30"
E30EL16	16"	30"
E35EL	13"	35"
E35EL16	16"	35"
E42EL	13"	42"
E42EL16	16"	42"
E47EL	13"	47"
E47EL16	16"	47"

Frameless Glass Sliding Doors

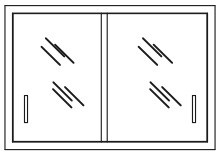

Model	Depth	Width
FAL30EL	13"	30"
FAL30EL16	16"	30"
FAL35EL	13"	35"
FAL35EL16	16"	35"
FAL42EL	13"	42"
FAL42EL16	16"	42"
FAL47EL	13"	47"
FAL47EL16	16"	47"

Framed Glass Sliding Doors

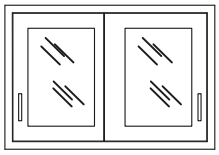

Model	Depth	Width
F30EL	13"	30"
F30EL16	16"	30"
F35EL	13"	35"
F35EL16	16"	35"
F42EL	13"	42"
F42EL16	16"	42"
F47EL	13"	47"
F47EL16	16"	47"

Double Sided Upper Cabinets

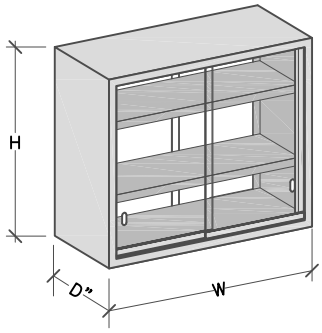

Model
-DS

The HLF Advantages:

- Any size or style of upper cabinets can be manufactured with doors on both sides.
- Can be used on top of shelf at islands.
- Inset steel - flush face construction.
- Furnished with 2 adjustable shelves.
- To convert any wall cabinet to double sided, add -DS at the end of cabinet model number.
- For locks, specify -LK at the end of the cabinet model number.

Wall Cabinets

HEIGHT - 30”

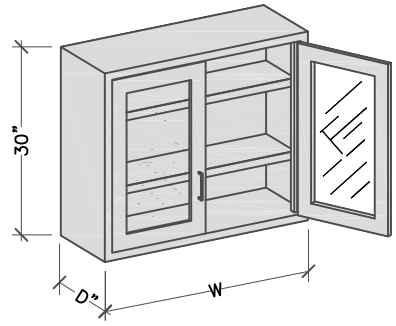

The HLF Advantages:

- Inset steel - flush face construction.
- Low height cabinets are 30" h. Width and depth as shown below.
- Furnished with 2 adjustable shelves.
- For locks, specify -LK at the end of the product number.

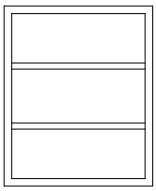

Open Cabinets

Model	Depth	Width
G18L	13"	18-3/4"
G18L16	16"	18-3/4"
G24L	13"	24-3/4"
G24L16	16"	24-3/4"

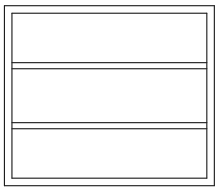

Model	Depth	Width
G30L	13"	30"
G30L16	16"	30"
G35L	13"	35"
G35L16	16"	35"
G42L	13"	42"
G42L16	16"	42"
G47L	13"	47"
G47L16	16"	47"

Hinged Solid Doors

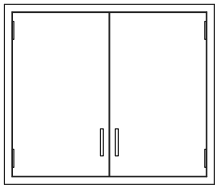

Model	Depth	Width
B30L	13"	30"
B30L16	16"	30"
B35L	13"	35"
B35L16	16"	35"
B42L	13"	42"
B42L16	16"	42"
B47L	13"	47"
B47L16	16"	47"

Sliding Solid Doors

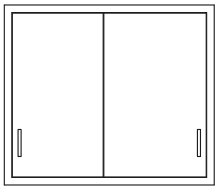

Model	Depth	Width
C30L	13"	30"
C30L16	16"	30"
C35L	13"	35"
C35L16	16"	35"
C42L	13"	42"
C42L16	16"	42"
C47L	13"	47"
C47L16	16"	47"

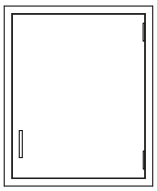

Hinged Solid Doors

Model	Depth	Width
A18L	13"	18-3/4"
A18L16	16"	18-3/4"
A24L	13"	24-3/4"
A24L16	16"	24-3/4"

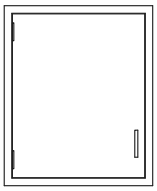

Model	Depth	Width
A18LL	13"	18-3/4"
A18LL16	16"	18-3/4"
A24LL	13"	24-3/4"
A24LL16	16"	24-3/4"

L = Left Hinged Door

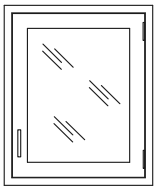

Framed Glass Hinged Doors

Model	Depth	Width
D18L	13"	18-3/4"
D18L16	16"	18-3/4"
D24L	13"	24-3/4"
D24L16	16"	24-3/4"

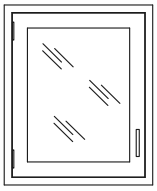

Model	Depth	Width
D18LL	13"	18-3/4"
D18LL16	16"	18-3/4"
D24LL	13"	24-3/4"
D24LL16	16"	24-3/4"

L = Left Hinged Door

Wall Cabinets

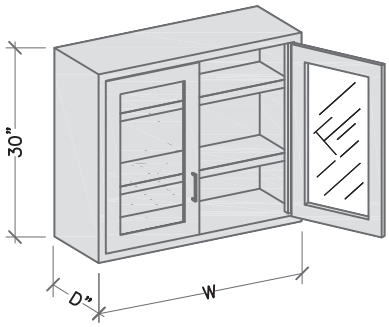

The HLF Advantages:

- Inset steel - flush face construction.
- Low height cabinets are 30" h. Width and depth as shown below.
- Furnished with 2 adjustable shelves.
- For locks, specify -LK at the end of the product number.

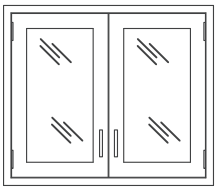

Framed Glass Hinged Doors

Model	Depth	Width
E30L	13"	30"
E30L16	16"	30"
E35L	13"	35"
E35L16	16"	35"
E42L	13"	42"
E42L16	16"	42"
E47L	13"	47"
E47L16	16"	47"

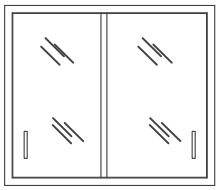

Frameless Glass Sliding Doors

Model	Depth	Width
FAL30L	13"	30"
FAL30L16	16"	30"
FAL35L	13"	35"
FAL35L16	16"	35"
FAL42L	13"	42"
FAL42L16	16"	42"
FAL47L	13"	47"
FAL47L16	16"	47"

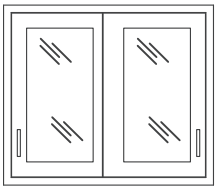

Framed Glass Sliding Doors

Model	Depth	Width
F30L	13"	30"
F30L16	16"	30"
F35L	13"	35"
F35L16	16"	35"
F42L	13"	42"
F42L16	16"	42"
F47L	13"	47"
F47L16	16"	47"

Wall Cabinets

HEIGHT - 36”

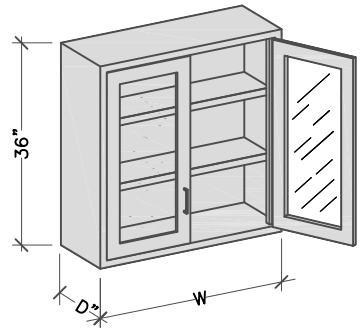

The HLF Advantages:

- Inset steel - flush face construction.
- Medium height cabinets are 36" h. Width and depth as shown below.
- Furnished with 2 adjustable shelves.
- For locks, specify -LK at the end of the product number.

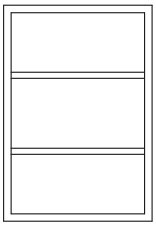

Open Cabinets

Model	Depth	Width
G18M	13"	18-3/4"
G18M16	16"	18-3/4"
G24M	13"	24-3/4"
G24M16	16"	24-3/4"

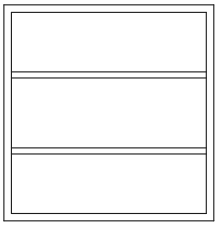

Model	Depth	Width
G30M	13"	30"
G30M16	16"	30"
G35M	13"	35"
G35M16	16"	35"
G42M	13"	42"
G42M16	16"	42"
G47M	13"	47"
G47M16	16"	47"

Hinged Solid Doors

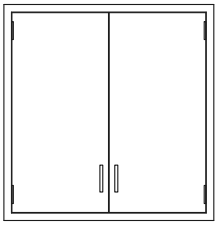

Model	Depth	Width
B30M	13"	30"
B30M16	16"	30"
B35M	13"	35"
B35M16	16"	35"
B42M	13"	42"
B42M16	16"	42"
B47M	13"	47"
B47M16	16"	47"

Sliding Solid Doors

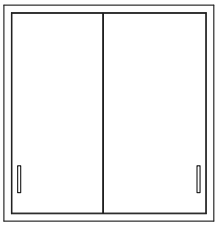

Model	Depth	Width
C30M	13"	30"
C30M16	16"	30"
C35M	13"	35"
C35M16	16"	35"
C42M	13"	42"
C42M16	16"	42"
C47M	13"	47"
C47M16	16"	47"

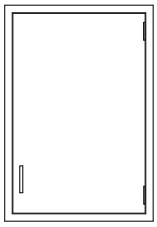

Hinged Solid Doors

Model	Depth	Width
A18M	13"	18-3/4"
A18M16	16"	18-3/4"
A24M	13"	24-3/4"
A24M16	16"	24-3/4"

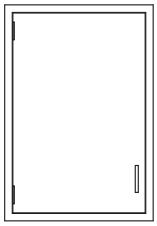

Model	Depth	Width
A18ML	13"	18-3/4"
A18ML16	16"	18-3/4"
A24ML	13"	24-3/4"
A24ML16	16"	24-3/4"

L = Left Hinged Door

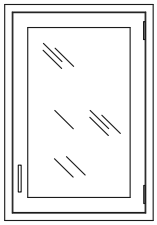

Framed Glass Hinged Doors

Model	Depth	Width
D18M	13"	18-3/4"
D18M16	16"	18-3/4"
D24M	13"	24-3/4"
D24M16	16"	24-3/4"

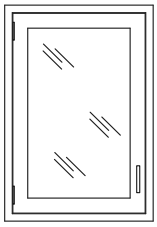

Model	Depth	Width
D18ML	13"	18-3/4"
D18ML16	16"	18-3/4"
D24ML	13"	24-3/4"
D24ML16	16"	24-3/4"

L = Left Hinged Door

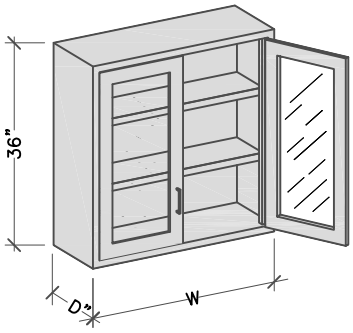

The HLF Advantages:

- Inset steel - flush face construction.
- Medium height cabinets are 36" h. Width and depth as shown below.
- Furnished with 2 adjustable shelves.
- For locks, specify -LK at the end of the product number.

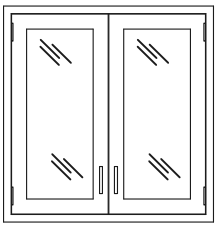

Framed Glass Hinged Doors

Model	Depth	Width
E30M	13"	30"
E30M16	16"	30"
E35M	13"	35"
E35M16	16"	35"
E42M	13"	42"
E42M16	16"	42"
E47M	13"	47"
E47M16	16"	47"

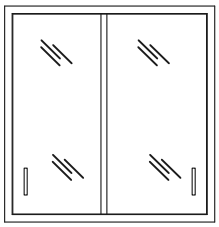

Frameless Sliding Doors

Model	Depth	Width
FAL30M	13"	30"
FAL30M16	16"	30"
FAL35M	13"	35"
FAL35M16	16"	35"
FAL42M	13"	42"
FAL42M16	16"	42"
FAL47M	13"	47"
FAL47M16	16"	47"

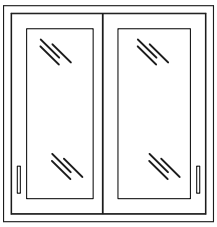

Framed Glass Sliding Doors

Model	Depth	Width
F30M	13"	30"
F30M16	16"	30"
F35M	13"	35"
F35M16	16"	35"
F42M	13"	42"
F42M16	16"	42"
F47M	13"	47"
F47M16	16"	47"

Wall Cabinets

HEIGHT - 48”

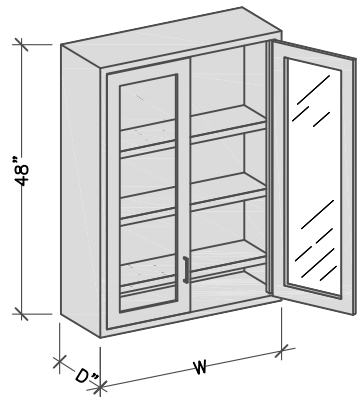

The HLF Advantages:

- Inset steel - flush face construction.
- Tall height cabinets are 48" h. Width and depth as shown below.
- Furnished with 3 adjustable shelves.
- For locks, specify -LK at the end of the product number.

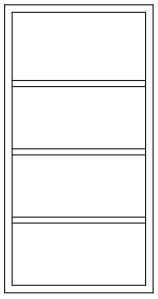

Open Cabinets

Model	Depth	Width
G18H	13"	18-3/4"
G18H16	16"	18-3/4"
G24H	13"	24-3/4"
G24H16	16"	24-3/4"

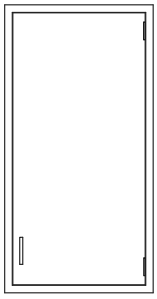

Hinged Solid Doors

Model	Depth	Width
A18H	13"	18-3/4"
A18H16	16"	18-3/4"
A24H	13"	24-3/4"
A24H16	16"	24-3/4"

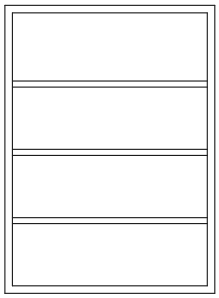

Model	Depth	Width
G30H	13"	30"
G30H16	16"	30"
G35H	13"	35"
G35H16	16"	35"
G42H	13"	42"
G42H16	16"	42"
G47H	13"	47"
G47H16	16"	47"

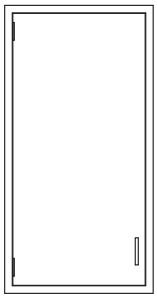

Model	Depth	Width
A18HL	13"	18-3/4"
A18HL16	16"	18-3/4"
A24HL	13"	24-3/4"
A24HL16	16"	24-3/4"

L= Left Hinged Door

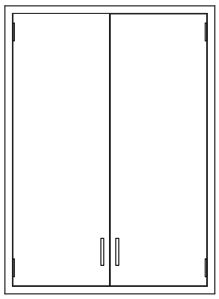

Hinged Solid Doors

Model	Depth	Width
B30H	13"	30"
B30H16	16"	30"
B35H	13"	35"
B35H16	16"	35"
B42H	13"	42"
B42H16	16"	42"
B47H	13"	47"
B47H16	16"	47"

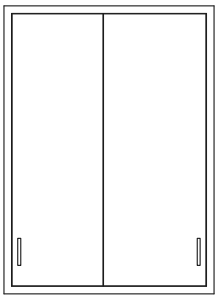

Sliding Solid Doors

Model	Depth	Width
C30H	13"	30"
C30H16	16"	30"
C35H	13"	35"
C35H16	16"	35"
C42H	13"	42"
C42H16	16"	42"
C47H	13"	47"
C47H16	16"	47"

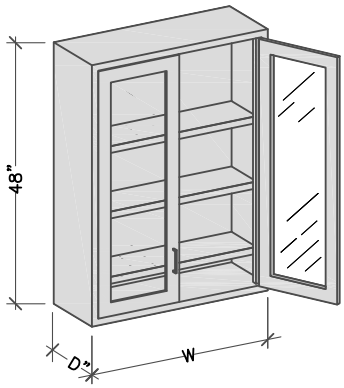

The HLF Advantages:

- Inset steel - flush face construction.
- Tall height cabinets are 48" h. Width and depth as shown below.
- Furnished with 3 adjustable shelves.
- For locks, specify -LK at the end of the product number.

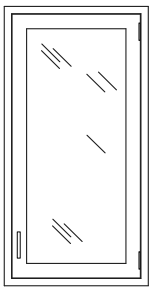

Framed Glass Hinged Doors

Model	Depth	Width
D18H	13"	18-3/4"
D18H16	16"	18-3/4"
D24H	13"	24-3/4"
D24H16	16"	24-3/4"

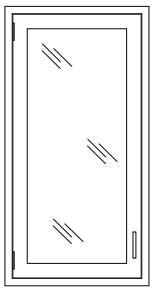

Framed Glass Hinged Doors

Model	Depth	Width
D18HL	13"	18-3/4"
D18HL16	16"	18-3/4"
D24HL	13"	24-3/4"
D24HL16	16"	24-3/4"

L = Left Hinged Door

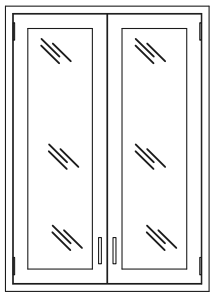

Framed Glass Hinged Doors

Model	Depth	Width
E30H	13"	30"
E30H16	16"	30"
E35H	13"	35"
E35H16	16"	35"
E42H	13"	42"
E42H16	16"	42"
E47H	13"	47"
E47H16	16"	47"

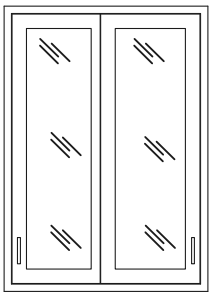

Framed Glass Sliding Doors

Model	Depth	Width
F30H	13"	30"
F30H16	16"	30"
F35H	13"	35"
F35H16	16"	35"
F42H	13"	42"
F42H16	16"	42"
F47H	13"	47"
F47H16	16"	47"

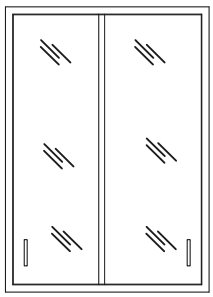

Frameless Sliding Doors

Model	Depth	Width
FAL30H	13"	30"
FAL30H16	16"	30"
FAL35H	13"	35"
FAL35H16	16"	35"
FAL42H	13"	42"
FAL42H16	16"	42"
FAL47H	13"	47"
FAL47H16	16"	47"

Wall Cabinet Filler Panels

Wall Cabinet Front Filler Panel

- For use between 2 cabinets or between cabinet & wall.
- Specify -T if the panel needs to be field trimmed with an SA1WC double-slip angle.

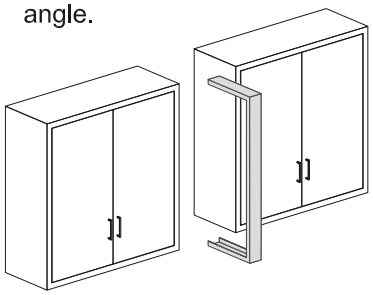

Model	Width	Height	Depth
WCF1EL13	1"	24"	13"
WCF1L13	1"	30"	13"
WCF1M13	1"	36"	13"
WCF1H13	1"	48"	13"
WCF3EL13	3"	24"	13"
WCF3L13	3"	30"	13"
WCF3M13	3"	36"	13"
WCF3H13	3"	48"	13"
WCF6EL13	6"	24"	13"
WCF6L13	6"	30"	13"
WCF6M13	6"	36"	13"
WCF6H13	6"	48"	13"
WCF12EL13	12"	24"	13"
WCF12L13	12"	30"	13"
WCF12M13	12"	36"	13"
WCF12H13	12"	48"	13"

Model	Width	Height	Depth
WCF1EL16	1"	24"	16"
WCF1L16	1"	30"	16"
WCF1M16	1"	36"	16"
WCF1H16	1"	48"	16"
WCF3EL16	3"	24"	16"
WCF3L16	3"	30"	16"
WCF3M16	3"	36"	16"
WCF3H16	3"	48"	16"
WCF6EL16	6"	24"	16"
WCF6L16	6"	30"	16"
WCF6M16	6"	36"	16"
WCF6H16	6"	48"	16"
WCF12EL16	12"	24"	16"
WCF12L16	12"	30"	16"
WCF12M16	12"	36"	16"
WCF12H16	12"	48"	16"

Wall Cabinet Corner Filler Panel

- Used to close top and bottom where 2 upper cabinets are joined at right angles.
- Supplied in sets of two.

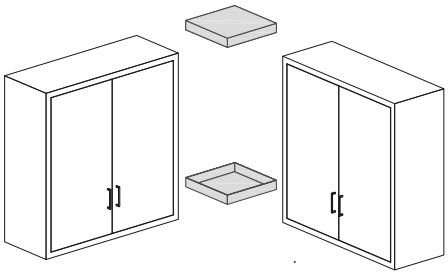

Model	Width	Depth
WCCF13	13"	16"
WCCF16	16"	16"
WCCF1316	13"	16"

Sloping Tops

- Add -SL to the end of the wall cabinet model number.

Model
-SL

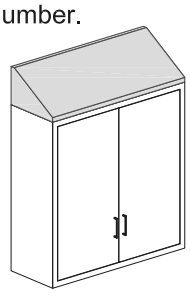

Double-Slip Angle

- Field trimmable for all height wall cabinets.

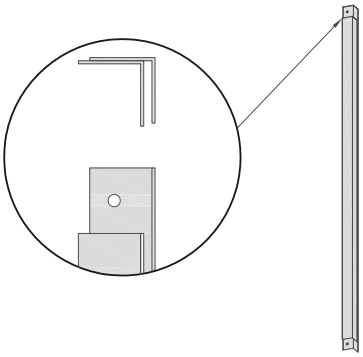

Model	Width	Height
SA1WC	1"	48"

Wall Cabinet Ceiling Enclosures

- Used to enclose the space between the top of the wall cabinet and the ceiling.
- Angles for installation and trimmable scribes are provided.
- Add -CE to the end of the wall cabinet model number.
- A verified ceiling height is required to determine the correct enclosure height.

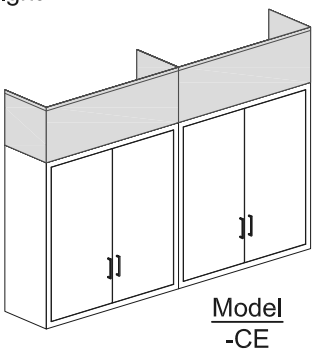

Model
-CE

Corner Sloping Top

- Used in corners with sloping tops and where wall cabinets are at right angles.

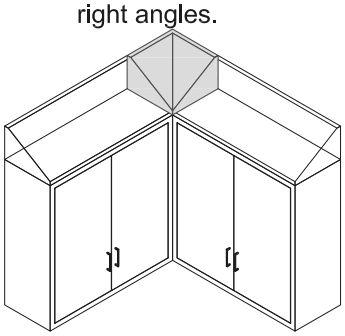

Model	Depth	Height
CSL13	13"	8-1/4"
CSL16	16"	8-1/4"

Tall Cabinet Details

HLF Tall Cabinets

Hanson tall cabinets are available in a variety of styles and sizes including custom designed models to meet your specific applications. They are designed for maximum storage capacity, and access.

- Tall cabinets are 84" high.
- Choice of 18" or 23" deep cabinets.
- Available in solid panel or framed glass in both hinged and sliding doors.
- Instrument and wardrobe cabinets are also available.

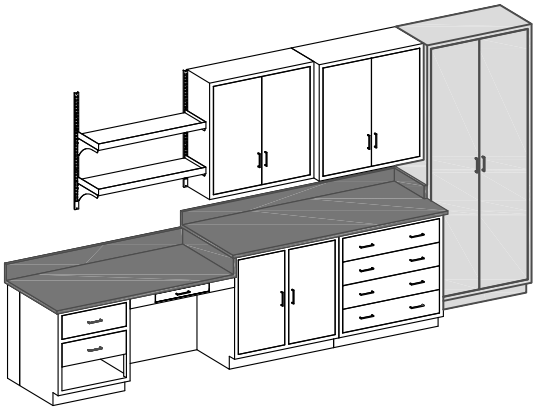

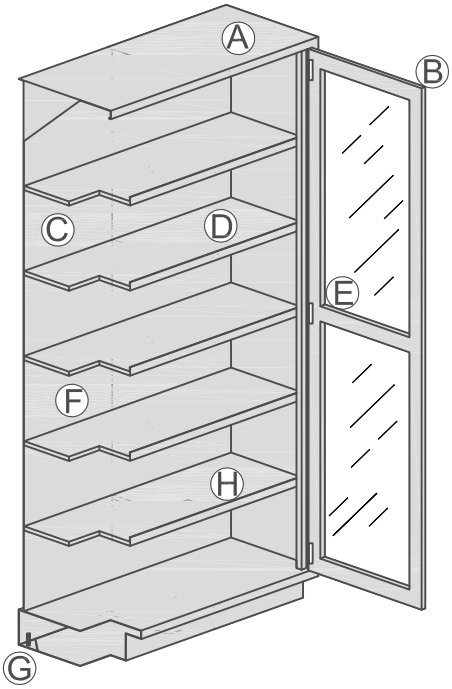

HLF Features and Benefits

A - Cabinet body design accepts multiple styles of doors.
B - 18 ga. double door fronts, with sound deadening full channeled edges.
C - 18 ga. cabinet bodies with flush seamless welded face.
D - 5 each 20 ga. adjustable shelves are included in open and door cabinets. Shelves have welded hat-channels in cabinets 35" and over.
E - Stainless steel 5 knuckle hinges on cabinet doors that close against neoprene rubber bumpers.
F - HLF cabinets have electrostatically applied, baked on powder coated epoxy paint finish for superior performance.
G - 14 ga. gusset plates with hex-head leveling bolts at each corner.
H - Front shelf lips are included on all shelves.

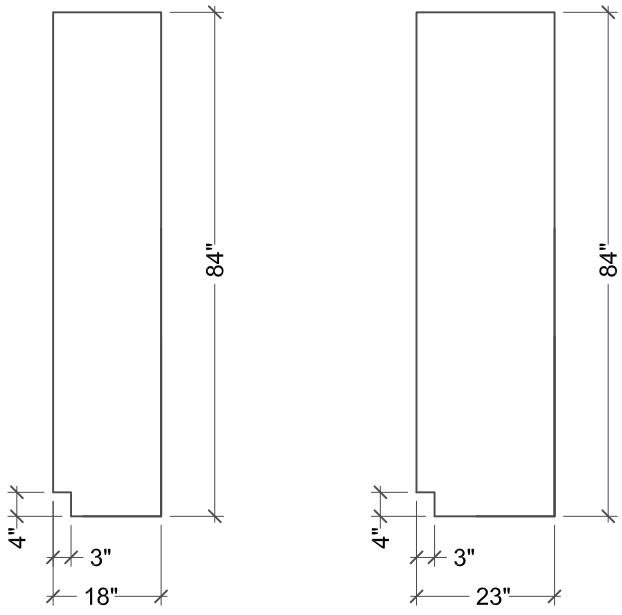

Tall Storage Cabinets

HEIGHT - 84”

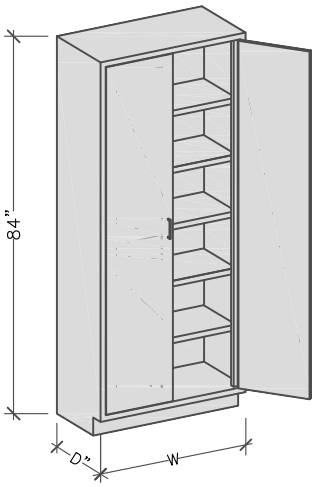

The HLF Advantages:

- Inset steel - flush face construction.
- Tall storage cabinets are 84" h. Width and depth as shown below.
- Tall cabinets have 5 adjustable shelves.
- For locks, specify -LK at the end of the cabinet model number. Note: When locks are specified on tall storage cabinets, the center shelf will be fixed and non-adjustable.

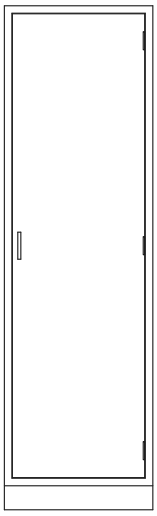

Hinged Solid Doors

Model	Depth	Width
H18HA	18"	18-3/4"
H18HB	23"	18-3/4"
H24HA	18"	24-3/4"
H24HB	23"	24-3/4"

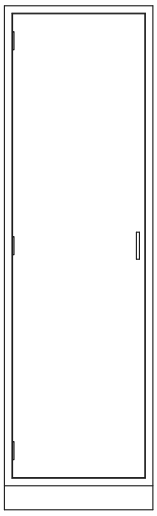

Hinged Solid Doors

Model	Depth	Width
H18HAL	18"	18-3/4"
H18HBL	23"	18-3/4"
H24HAL	18"	24-3/4"
H24HBL	23"	24-3/4"

L = Left Hinged Door

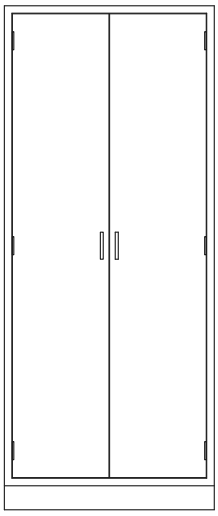

Hinged Solid Doors

Model	Depth	Width
I30HA	18"	30"
I30HB	23"	30"
I35HA	18"	35"
I35HB	23"	35"
I42HA	18"	42"
I42HB	23"	42"
I47HA	18"	47"
I47HB	23"	47"

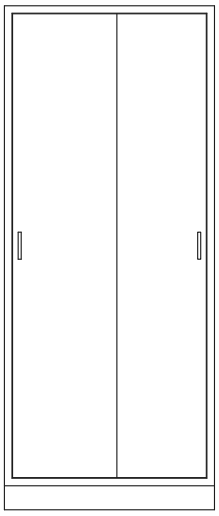

Sliding Solid Doors

Model	Depth	Width
J30HA	18"	30"
J30HB	23"	30"
J35HA	18"	35"
J35HB	23"	35"
J42HA	18"	42"
J42HB	23"	42"
J47HA	18"	47"
J47HB	23"	47"

Tall Storage Cabinets

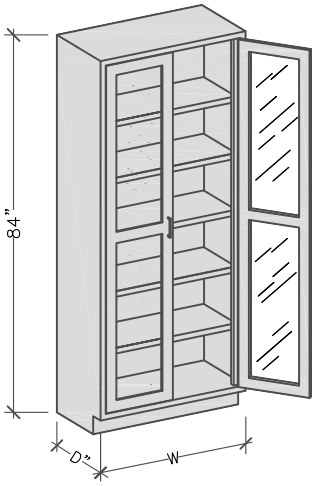

The HLF Advantages:

- Inset steel - flush face construction.
- Tall storage cabinets are 84" h. Width and depth as shown below.
- Tall cabinets have 5 adjustable shelves.
- For locks, specify -LK at the end of the cabinet model number. Note: When locks are specified on tall storage cabinets, the center shelf will be fixed and non-adjustable.

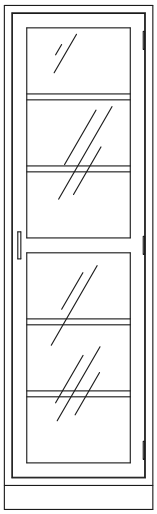

Framed Glass Hinged Doors

Model	Depth	Width
K18HA	18"	18-3/4"
K18HB	23"	18-3/4"
K24HA	18"	24-3/4"
K24HB	23"	24-3/4"

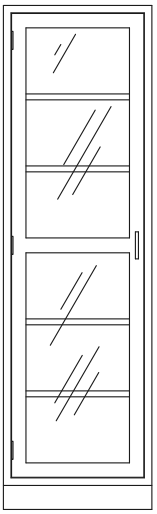

Framed Glass Hinged Doors

Model	Depth	Width
K18HAL	18"	18-3/4"
K18HBL	23"	18-3/4"
K24HAL	18"	24-3/4"
K24HBL	23"	24-3/4"

L = Left Hinged Door

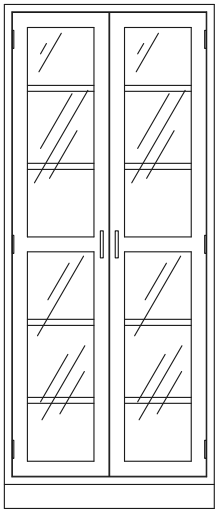

Framed Glass Hinged Doors

Model	Depth	Width
L30HA	18"	30"
L30HB	23"	30"
L35HA	18"	35"
L35HB	23"	35"
L42HA	18"	42"
L42HB	23"	42"
L47HA	18"	47"
L47HB	23"	47"

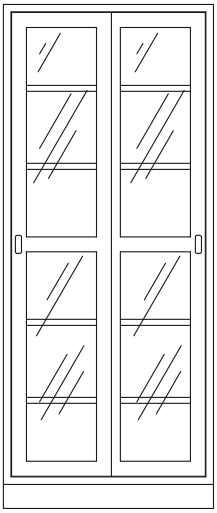

Framed Glass Sliding Doors

Model	Depth	Width
M30HA	18"	30"
M30HB	23"	30"
M35HA	18"	35"
M35HB	23"	35"
M42HA	18"	42"
M42HB	23"	42"
M47HA	18"	47"
M47HB	23"	47"

Tall Storage Cabinets

HEIGHT - 84”

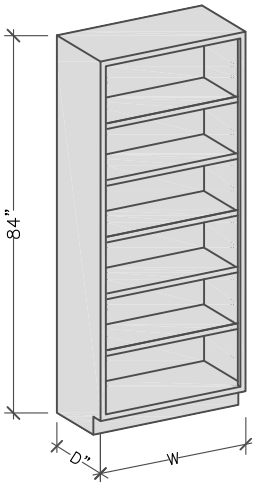

The HLF Advantages:

- Inset steel - flush face construction.
- Tall storage cabinets are 84" h. Width and depth as shown below.
- Tall cabinets have 5 adjustable shelves.

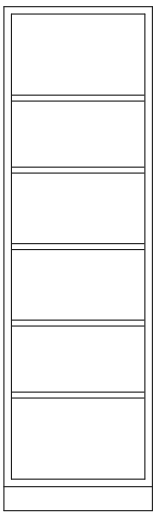

Open Cabinets

Model	Depth	Width
N18HA	18"	18-3/4"
N18HB	23"	18-3/4"
N24HA	18"	24-3/4"
N24HB	23"	24-3/4"

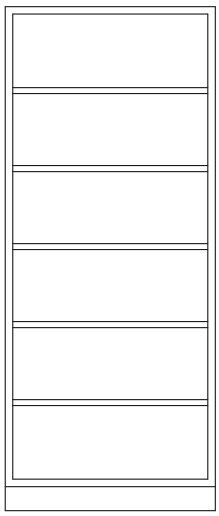

Open Cabinets

Model	Depth	Width
N30HA	18"	30"
N30HB	23"	30"
N35HA	18"	35"
N35HB	23"	35"
N42HA	18"	42"
N42HB	23"	42"
N47HA	18"	47"
N47HB	23"	47"

Tall Storage Cabinets

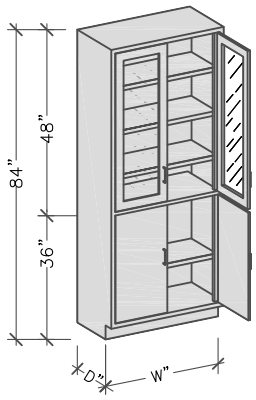

The HLF Advantages:

- Inset steel - flush face construction.
- Tall storage cabinets are 84" h. Width and depth as shown below.
- For locks, specify -LK at the end of the cabinet model number. Note: When locks are specified on tall storage cabinets, the center shelf will be fixed and non-adjustable.

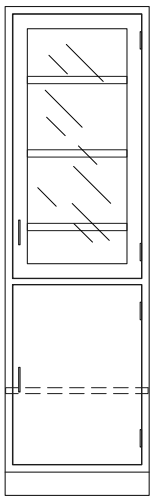

Combination Tall Cabinet

- Framed glass hinged door at top.
- Solid hinged door at bottom.
- Top cabinet has (3) adjustable shelves, bottom cabinet has (1) adjustable shelf.

Model	Depth	Width
O18HA	18"	18-3/4"
O18HB	23"	18-3/4"
O24HA	18"	24-3/4"
O24HB	23"	24-3/4"

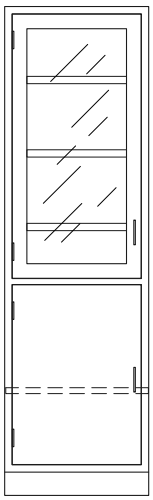

Combination Tall Cabinet

- Framed glass hinged door at top.
- Solid hinged door at bottom.
- Top cabinet has (3) adjustable shelves, bottom cabinet has (1) adjustable shelf.

Model	Depth	Width
O18HAL	18"	18-3/4"
O18HBL	23"	18-3/4"
O24HAL	18"	24-3/4"
O24HBL	23"	24-3/4"

L = Left Hinged Door

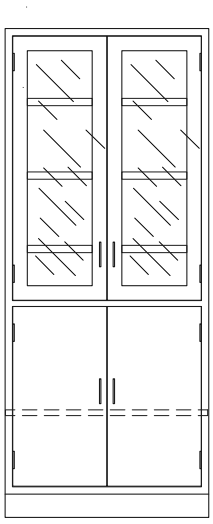

Combination Tall Cabinet

- Framed glass hinged doors at top.
- Solid hinged doors at bottom.
- Top cabinet has (3) adjustable shelves, bottom cabinet has (1) adjustable shelf.

Model	Depth	Width
O30HA	18"	30"
O30HB	23"	30"
O35HA	18"	35"
O35HB	23"	35"
O42HA	18"	42"
O42HB	23"	42"
O47HA	18"	47"
O47HB	23"	47"

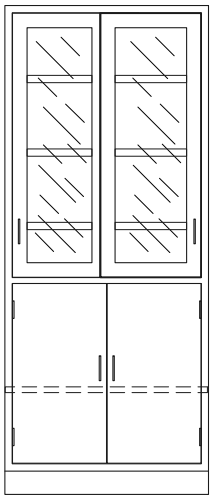

Combination Tall Cabinet

- Framed glass sliding doors at top.
- Solid hinged doors at bottom.
- Top cabinet has (3) adjustable shelves, bottom cabinet has (1) adjustable shelf.

Model	Depth	Width
P30HA	18"	30"
P30HB	23"	30"
P35HA	18"	35"
P35HB	23"	35"
P42HA	18"	42"
P42HB	23"	42"
P47HA	18"	47"
P47HB	23"	47"

Tall Storage Cabinets

HEIGHT - 84”

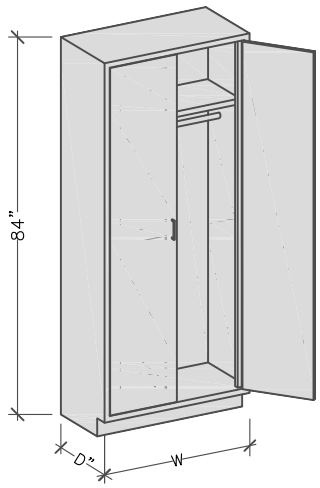

The HLF Advantages:

- Inset steel - flush face construction.
- Tall storage cabinets are 84" h. Width and depth as shown below.

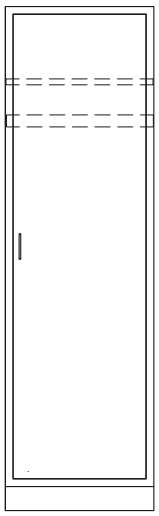

Wardrobe Cabinet

- Top Shelf.
- Clothes hanger rod.
- Hinged solid door.

Model	Depth	Width
Q18HB	23"	18-3/4"
Q24HB	23"	24-3/4"

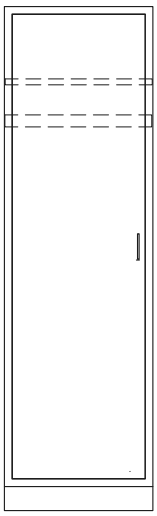

Model	Depth	Width
Q18HBL	23"	18-3/4"
Q24HBL	23"	24-3/4"

L = Left Hinged Door

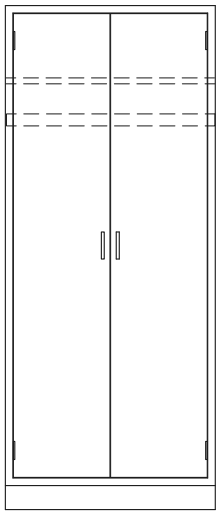

Wardrobe Cabinet

- Top Shelf.
- Clothes hanger rod.
- Hinged solid doors.

Model	Depth	Width
Q30HB	23"	30"
Q35HB	23"	35"
Q42HB	23"	42"
Q47HB	23"	47"

Tall Cabinet Fillers and Scribes

Tall Cabinet Front Filler

- Used between two cabinets or between a cabinet and a wall.
- Specify -T if the panel needs to be field trimmed with an SA1TC double-slip angle.

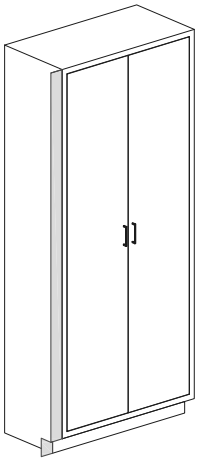

Model	Width	Height
TCF1	1-3/8"	84"
TCF3	3"	84"
TCF6	6"	84"
TCF12	12"	84"

Tall Cabinet Finished Backs

- Finished back of tall cabinets.
- Finished back panels are attached at the factory.
- Add -FB to the end of the tall cabinet model number.
- Tall cabinets must be properly anchored to walls or floors to prevent tipping.

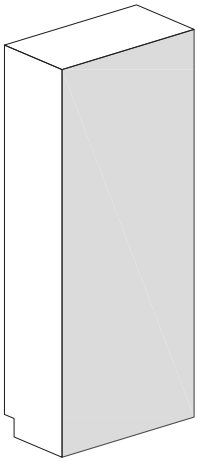

Model
-FB

Sloping Tops

- Add -SL to the end of the tall cabinet model number.

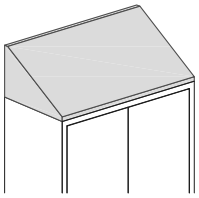

Model
-SL

Tall Cabinet Ceiling Enclosures

- Used to enclose the space between the top of the wall cabinet and the ceiling.
- Angles for installation and trimmable scribes are provided.
- Add -CE to the end of the tall cabinet model number.
- A verified ceiling height is required to determine the correct enclosure height.

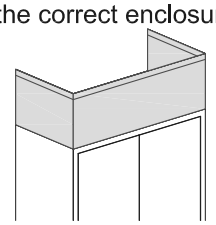

Model
-CE

Corner Sloping Top

- Used in corners with sloping tops and where tall cabinets are at right angles.

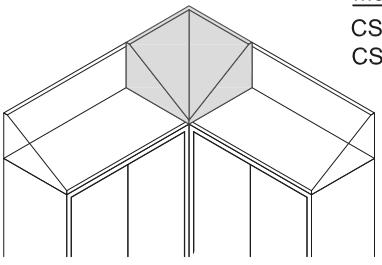

Model	Depth	Height
CSL18	18"	11-1/4"
CSL23	23"	14"

Double-Slip Angle

- Used with tall cabinet when front filler panels need to be field trimmed.

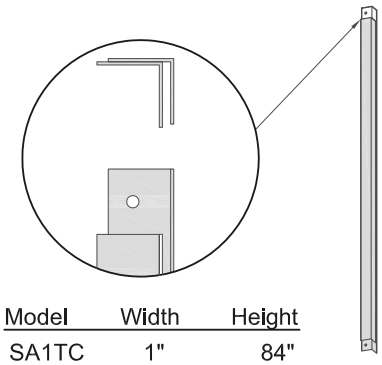

Model	Width	Height
SA1TC	1"	84"

Where To Find HLS

Our Lab Professionals Serve Customers Throughout The U.S.

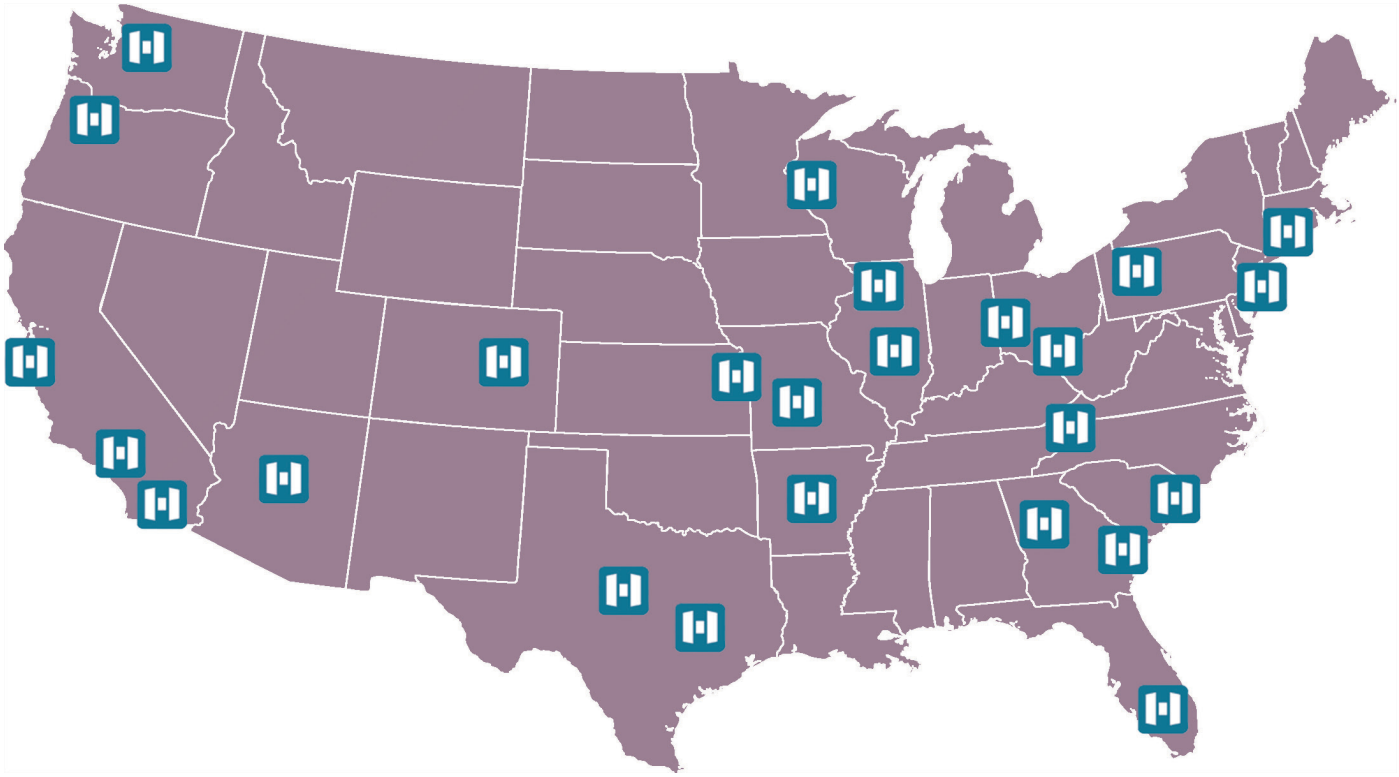

Here's what we deliver to our customers:

- Design and conceptual planning
- Installation
- Engineering
- National HLS representation with project management and installation support
- Support for engineers and contractors. Let us help you develop your new lab.
- Ideas and suggestions for how to do it better, faster, and cheaper
- Custom looks for standard costs: if you want a custom lab, we can show you how you may be able to achieve the same look with custom configuration of standard products.
- And if you really need custom pieces, we're vertically integrated, with design, manufacturing, and expert installation in one company. So we are likely to be able to deliver custom furniture and fume hoods at lower costs than you might expect.
- The fastest delivery in the industry. In every category. Period.

Ready to get started? We're here to serve you.

Call us at 1-805-498-3121
Email us at info@hansonlab.com
Or call your HLS representative